ORDER NO. VRD-8207-110

Service Manual

Video Cassette Recorder

Panasonic VHS

NV-777

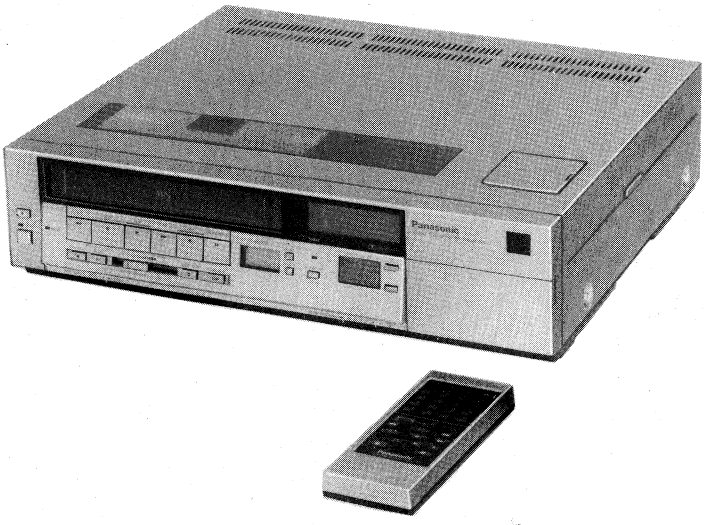

Vol. 1	Vol. 2	Vol. 3	Vol. 4
Summary *Operating Instructions*	*Mechanical Adjustment Procedures* *Electrical Adjustment Procedures*	*Block Diagrams* *Schematic Diagrams*	*Exploded Views* *Replacement Parts List*

VHS

Panasonic

Matsushita Electric Trading Co., Ltd.
P.O. Box 288, Central Osaka Japan

ORDER NO. VRD-8207-110

Service Manual

Video Cassette Recorder

Vol. 1

Panasonic VHS

NV-777 -E -EG -B

Summary Operating Instructions

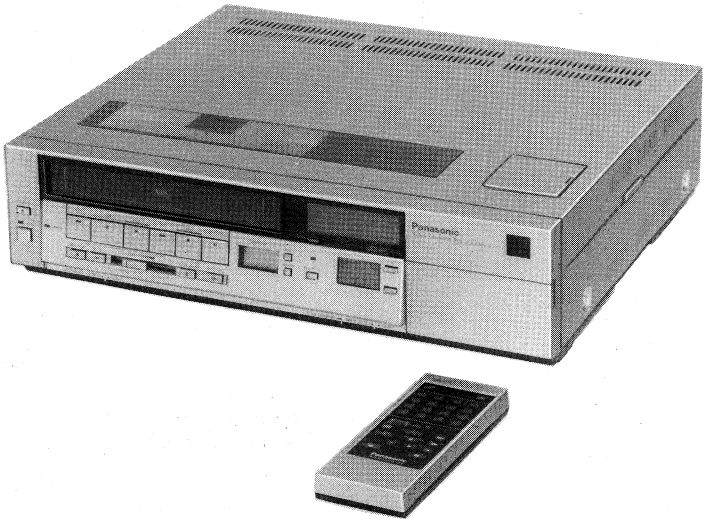

SPECIFICATIONS

Power Source:	220 V AC 50/60 Hz (NV-777-E, EG) 240 V AC 50/60 Hz (NV-777B)
Power Consumption:	Approx. 38 watts
Television System:	CCIR: 625 lines, 50 fields PAL colour signal (NV-777-E/-B) CCIR: 625 lines, 50 fields PAL/SECAM (DDR) colour signal (NV-777-EG)
Video Recording System:	2 rotary heads, helical scanning system Luminance: FM azimuth recording Colour signal: converted subscarrier phase shift recording
Audio Track:	1 track
Tape Format:	Tape width 12.7 mm high density tape
Tape Speed:	23.39 mm/s
Record/Playback Time:	240 min. with NV-E240
FF/REW Time:	Less than 4.5 min. with NV-E180
Heads:	Video: 3 rotary heads 1 pair for normal recording and playback (R-L Head) 1 pair for trick play (L-L′ Head) (field still and slow) Audio/Control: 1 stationary head Erase: 1 full track erase
Input Level:	Video: VIDEO IN connector (BNC) 1.0 Vp-p, 75Ω terminated Audio: LINE IN jack More than −20 dB, 50 kΩ
Output Level:	Video: VIDEO OUT connector (BNC) 1.0 Vp-p, 75Ω terminated Audio: LINE OUT jack −6 dB, less than 1 kΩ RF Modulated: UHF channel 36 ± 4CH 73 dBμ ± 4 dBμ 75Ω terminated
Weight:	10.4 kg
Dimensions:	430(W) × 115(H) × 372(D) mm
Accessory Supplied:	1 pc. DIN-RF Cable VJA0130 1 pc. Video Cassette Tape (NV-777-E/-B) 1 pc. Wireless Remote Controller, NV-A17-E
Optional Accessories:	Video cassette tape: NV-E240 Approx. 344 m, 240 min. NV-E180 Approx. 258 m, 180 min. NV-E120 Approx. 174 m, 120 min. NV-E60 Approx. 88 m, 60 min. Video Camera, WV-2600E, WV-3000E, WV-3200E

Weight and dimensions shown are apparoximate.
Specifications are subject to change without notice.

Panasonic

Matsushita Electric Trading Co., Ltd.
P.O. Box 288, Central Osaka Japan

INTRODUCTION

This service manual contains technical information which will allows service technicians to understand and service the Panasonic PAL VHS Video Tape Recorder Model NV-777E/EG/B.
The NV-777E/EG/B has many special features as shown in page 1-2.
These features in addition to the basic PAL VHS Format make the unit an ideal one for your culture and entertainment.

CONTENTS

SPECIFICATIONS ..... Cover
INTRODUCTION 1-1
FEATURES 1-2
CONTROLS AND COMPONENTS 1-3
VTR TUNER SETTING 1-6
INFRA-RED REMOTE CONTROL 1-7
INSERT EDITING (Insert Recording) 1-8

*Noise reduction system manufactured under license from Dolby Laboratories Licensing Corporation.

FEATURES

4 hours recording and playback

The unit can record and play back up to 4 hours on the professional 4-hour VHS format in an excellent picture quality with the new longer playing NV-E240 tape.

Super still, Super slow

For clearer, less blurred still picture and slow motion.

Multi-motion playback

In addition to regular playback, Super still and Super slow, you can operate multi-motion playback as follows: CUE (forward at 9 times normal speed), REVIEW (at 9 times normal speed in reverse), STILL ADVANCE (to advance a still picture), VARIABLE SLOW (at 1/5–1/30 normal speed), REVERSE PLAY (at normal speed in reverse).

Front loading system

This new design enables you to insert a video cassette in front without taking place. The Cassette-In Indicator " ▭ " appears when the video cassette is in the VTR.

Infra-red remote control

The remote control allows the following VTR functions.
•POWER •RECORD •PLAY •CUE •REVIEW •PAUSE/STILL •STILL ADVANCE •VARIABLE SLOW •FAST FORWARD •REWIND •CHANNEL CHANGE •STOP

One-Touch Timer Record Button

One-Touch Timer Record (OTR) Button enables you to do impromptu timer recordings at any time. Just select channel to be recorded and push the OTR Button for 30, 60, 90, 120 minutes of recording.

Insert Editing

The Insert Editing allows you to insert new pictures onto an pre-recorded tape. To complete tape editing you can add the sound with the audio dubbing function.

14-day 4 programmable timer

The built-in timer allows you to record TV programmes up to two weeks ahead. 4 different programmes can be recorded (include "Everyday" Recording).

Recording one programme while watching another

The built-in tuner allows you to record a programme that you don't want to miss while watching another programme.

Remaining Tape Time Readout

During recording and regular playback, the remaining tape time is indicated on the Electronic Counter.

Fine Editing Function

When the Pause/Still Button is pressed during recording, the tape will automatically rewind slightly to reduce noise.

Dolby Noise-Reduction System*

This VTR can be operated with Dolby NR. Dolby NR is a noise reduction system.

*'Dolby' and the double-D symbol are trademarks of Dolby Laboratories Licensing Corporation.

Auto rewind (except timer recording)

When the tape reaches its end, the tape will automatically rewind to this beginning or to the "0000" counter position if the Memory Switch is ON.

CONTROLS AND COMPONENTS

TOP and FRONT

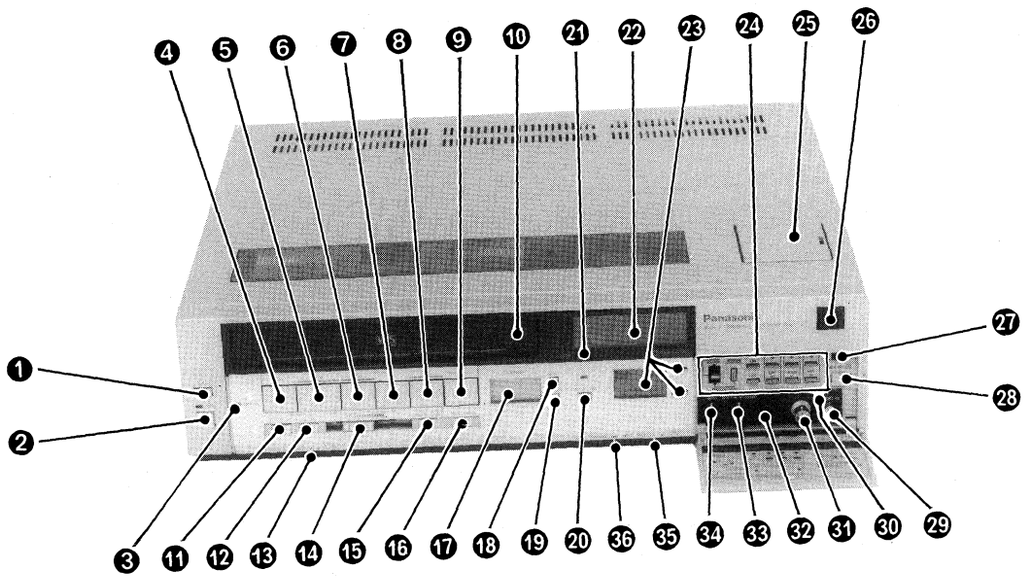

❶ **Eject Button**
For removing the cassette.

❷ **VTR Switch**
With indicator lamp for turning the VTR on and off.

❸ **Camera Input Indicator Lamp**
Lights up when the Input Signal Selector is set to "CAMERA".

❹ **Rewind/Review ◀◀ Button**
Press this button to rewind tapes. During the play mode pressing this button will allow you to view the picture in reverse at about 9 times the recorded tape speed.

❺ **Stop Button**
For stopping the tape.

❻ **Play Button**
With indicator lamp for playback.

❼ **Fast Forward/Cue ▶▶ Button**
Press this button to move the tape forward rapidly. During the play mode pressing this button will allow you to view the picture in the forward direction at about 9 times the recorded tape speed.

❽ **Record Button**
With indicator lamp for recording. Press this button together with PLAY button.

❾ **Pause/Still Button**
With indicator lamp for a temporary halt of recording and for obtaining still-picture playback.

❿ **Cassette Holder**
For insertion of a video cassette.

⓫ **Reverse Play Button**
For playback at normal speed in reverse.

⑫ **Slow Button**

⑬ **Tape Select Switch**
Set this switch to the "~E180" position. When using NV-E240 video cassette, set this switch to "E240" so that the Remaining Tape Time Readout can function properly.

⑭ **Slow-motion Slide Controller**
For controlling slow-motion from 1/30 to 1/5 speed with the Slow Button depressed.

⑮ **Audio Dub Button**
With indicator lamp for Audio Dubbing.

⑯ **Still Advance Button**
For advancing a still-picture frame by frame with the Pause/Still Button depressed.

⑰ **Electronic Counter**

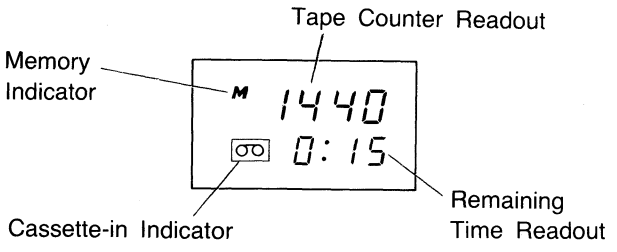

When the dew forms:

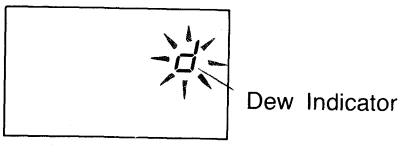

⑱ **Reset Button**
For setting the counter to "0000".

⑲ **Memory Switch**
For automatic tape stop when the counter reaches "0000" in the rewind mode. "M" is indicated on the Electronic Counter when the Memory Switch is ON.

⑳ **Dolby NR Switch**
With indicator lamp for turning on and off the noise reduction system Dolby NR during recording and playback.

㉑ **One-Touch Timer Rec (OTR) Button**

㉒ **Time Display**
Indicated either the time and day or recording start/stop times for the timer recording.

㉓ **Channel Indicator/Up and Down Buttons**

㉔ **Timer Controls**

㉕ **Tuner set-up Controls**
See page 1-6.

㉖ **Infra-red Remote Control Sensor**
Receives the signal from the infra-red Remote Control.

㉗ **Dim/Bright Switch**
Changes the brightness of the time display.

㉘ **Timer Rec Switch**
For turning the VTR on or off for timer recording.

㉙ **Audio Input Jack**
For connecting an audio cable of a video camera, a component audio system or another VTR.

㉚ **Camera Remote Control Jack**
For connecting a remote control cable of a video cable of a video camera (optional).

㉛ **Video Input Jack**
For connecting a video cable of a video camera or an output video signal of another VTR.

㉜ **Microphone Input Jack**
For connecting a microphone.

㉝ **Picture Sharpness Control**
For making picture's outline sharper or softer. It has not effect when recording.

㉞ **Tracking Control**
Use this control during playback if the image is partially obscured by bands of noise.

㉟ **Input Signal Selector**
For selecting the input signal to be recorded.
CAMERA: To make a recording with using a video camera which is connected to the Video Input Jack and the Audio Input Jack.
TUNER: To record a TV programme with the built-in tuner of the VTR.

㊱ **Slow Tracking Control**
For use with Slow and Still playback modes.

REAR

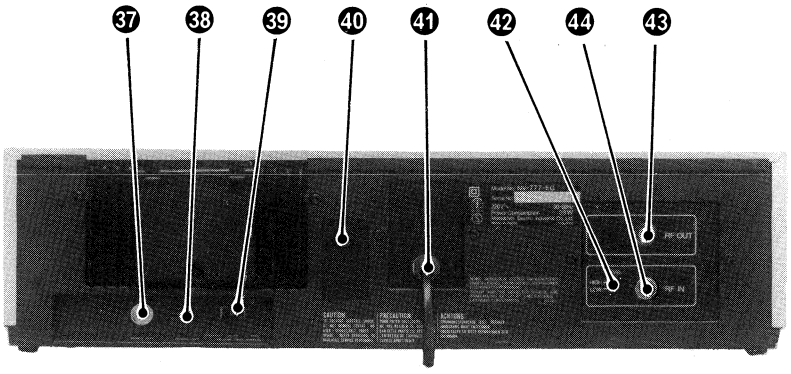

37 Video Output Jack
For connecting a video cable to a TV monitor etc.

38 Audio Output Jack
For connecting an audio cable of a TV monitor, a component audio system, or another VTR.

39 Colour Mode/Test Signal Switch
This switch has the following two functions:
(1) to tune the TV to the RF output channel and (2) to stabilize the colour image during recording or playback. Normally, the switch should be set to the "AUTO" position.
To tune the television to the RF output channel:
Set this switch to "TEST" to turn the TV channel to VTR RF Output.
To stabilize the colour image:
Set this switch to "COLOUR" to make a stable colour recording where the supplied corrent is extremely low. For playback, this switch must be in "COLOUR".

40 RF Converter Channel Selector
The built-in RF converter allows you to play back VTR on a standard TV receiver.

41 AC Power Cord

42 RF Signal Level Switch
Used to attenuate the reception of the VHF and/or UHF antenna signals.
If the reception is normal, set to "HIGH". If the signal is strong (the stripped pattern appears at the top of the picture on TV), set to "LOW".

43 RF Output Terminal
For connection to the antenna terminal (COAXIAL type) of TV with the DIN-DIN Coaxial Cable supplied with the unit.

44 RF Input Terminal
For connection with the external aerial.

VTR TUNER SETTING

	VHF		UHF
	I	III	U
NV-777-B	——	——	21–69
NV-777-E, EG	Band I 2–4	Band III 5–12	Band IV/V 21–69

The VTR tuner makes it possible to receive TV stations and to record their programmes.
Each of the buttons can be tuned any channel within the range of channels as shown in the table.

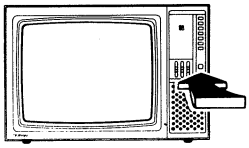

❶ ON, Select RF Output

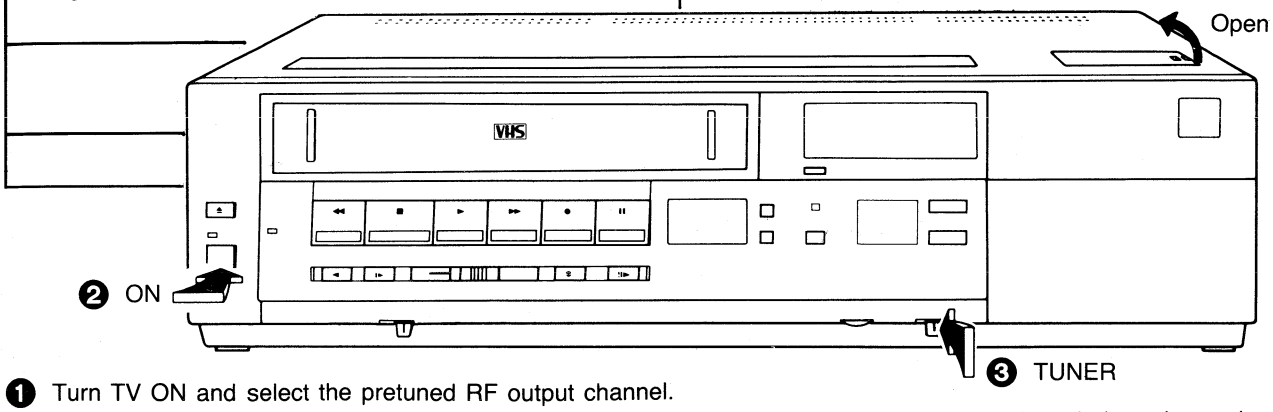

❶ Turn TV ON and select the pretuned RF output channel.

❷ Turn the VTR ON.

❸ Select Input Signal Selector to "TUNER".

❹ Set the PRESET Switch to the "PRESET" position.

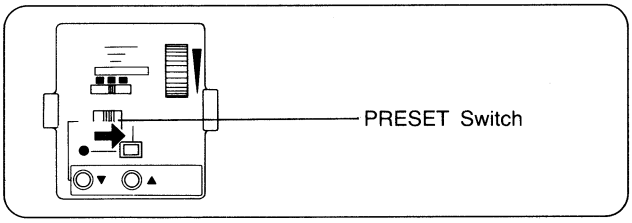

❺ Press Channel Up or Down Button to select your desired channel.

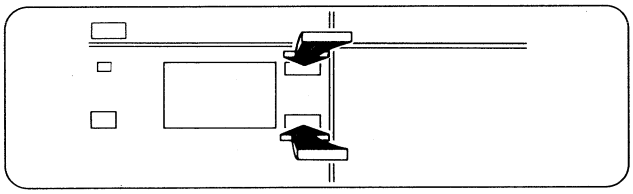

❻ Set Band Switch to be matched "I", "III" or "U" position.
•For model NV-777-B, this step is not necessary. (There is no switch.)

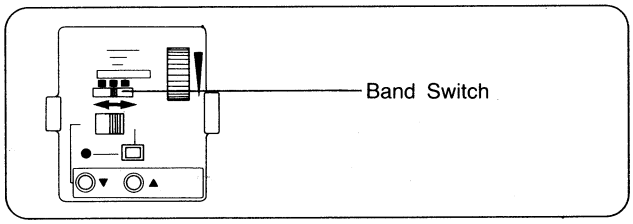

❼ Turn the tuning control until the picture on your TV is satisfactory.

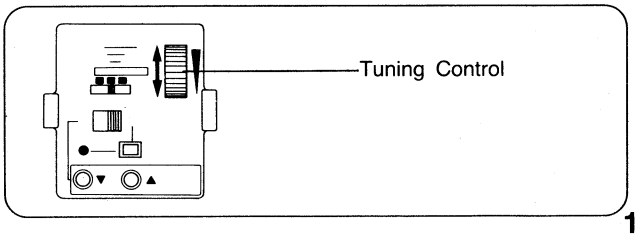

A white indicator in the window shows the approximate position of the tuning range. It moves right for high and left for low channel range.

❽ Press the Memory Button after the adjustment for the channel is completed (the corresponding lamp lights up). AFC Indicator appears on the Channel Indicator.

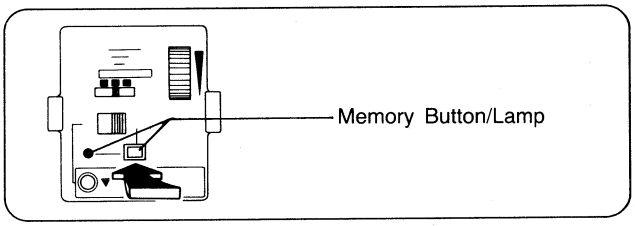

❾ Repeat steps ❺~❽ for each channel you desire to tune.

❿ Set the PRESET Switch to the "NORMAL" position.

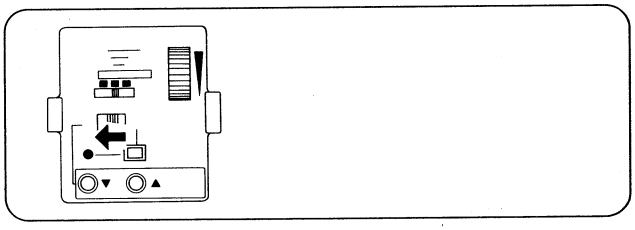

If you need Fine Tuning

❶ Set PRESET Switch to "NORMAL".

❷ Press Tuning Up or Down Button.

To return the channel to its former state, press the MEMORY Button.

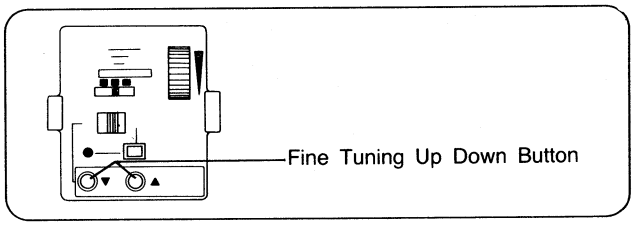

INFRA-RED REMOTE CONTROL

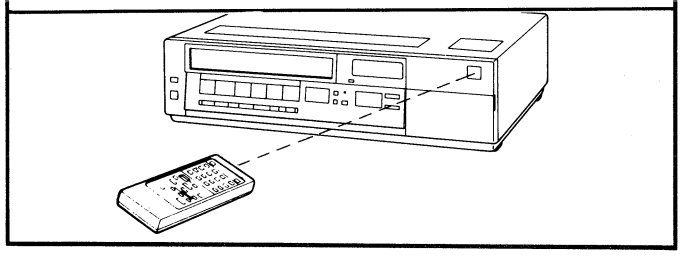

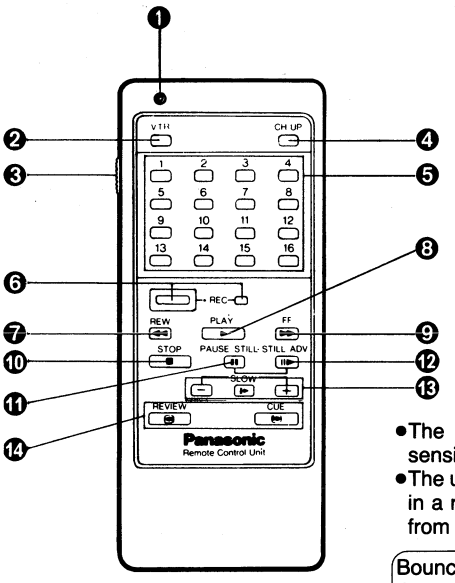

- The remote control light-sensing angle is about 60°.
- The unit should be used within a range of about 7 meters from the front of the VTR.

Bouncing wave may reach to the sensor, but transient wave directly to sensor for best results.

❶ **OUTPUT INDICATOR:**
For indicating remote control operations.

❷ **VTR:**
For turning the VTR on and off.

❸ **REMOTE CONTROL SWITCH:**
Set this switch to ON when using the unit.

❹ **CH UP Button:**
For advancing to the next channel.

❺ **CHANNEL SELECTION BUTTONS:**

❻ **RECORD (Two Buttons Entry):**
To start recording, press the two buttons simultaneously.

❼ **REWIND**

❽ **PLAY**

❾ **FF**

❿ **STOP**

⓫ **PAUSE/STILL**

⓬ **STILL ADV**

⓭ **SLOW, "+", "−":**
Press the SLOW Button for field-slow at 1/15 of normal speed. Speed can be varied from 1/5 to 1/30 of normal speed by "+", "−" Buttons.
Note:
- If you leave Super-Slow mode more than 10 minutes, VTR will stop automatically to protect the tape and the video heads.
- Adjust the Slow Tracking Control if necessary.

⓮ **REVIEW, CUE**

Note:
Infra-red beam will bounce off the walls and eventually reach to the remote sensor, but for best results transmit beam directly to the remote sensor.
Sunlight may interfere the beam.

INSERT EDITING (Insert Recording)

Insert Editing, as its name suggests, consists of inserting titles and new scenes into a video tape which has already been recorded.

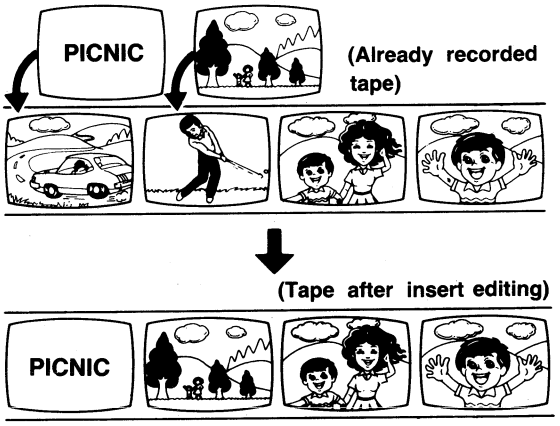

Insert Editing is a handy function for editing tapes by inserting new scenes from a camera or another video recorder into an already recorded video tape. You can put together your own edited programmes. In Insert Editing, only the new video signals are recorded, but the original sound remains on the tape. If you want to replace the original sound after the Insert Recording, follow the instructions given in "AUDIO DUBBING.

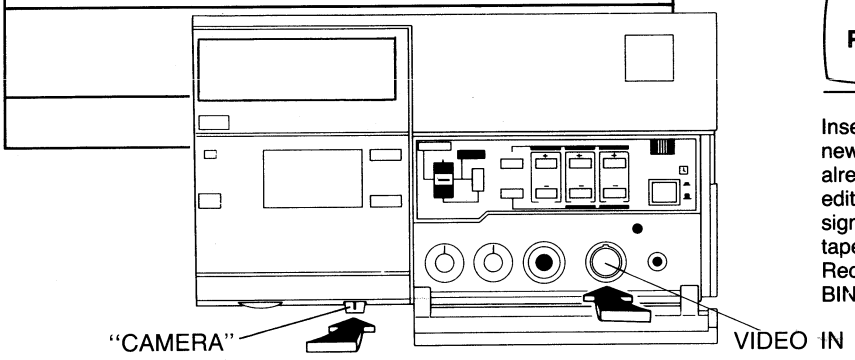

For the connection between this video recorder and a second VTR or a video camera for Insert Editing, according to the CAMERA RECORDING or DUBBING method.

❶ Press the Play Button.

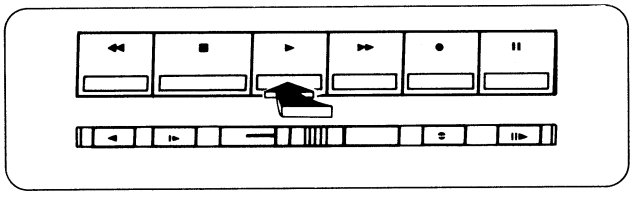

❷ Check the playback picture and use the Tracking Control, if necessary, to obtain perfect picture quality.

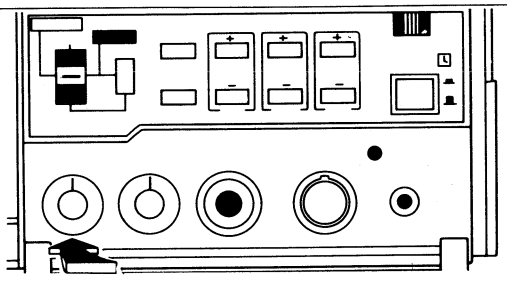

Adjust the Tracking Control as shown below, when inserting a new recording on a tape that was recorded on another video recorder.

1. Rotate the Tracking Control slowly clockwise until a noise bar appears on the screen, and make a note that this is position A.

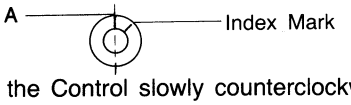

2. Then rotate the Control slowly counterclockwise until another noise bar appears, and make a note that this is position B.

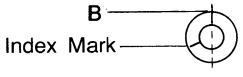

3. Set the index mark of the Tracking Control to a point halfway between positions A and B.

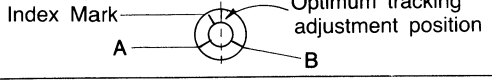

❸ Find the exact point where the Insert Recording is to finish, by using the Review, Cue or Slow Buttons.

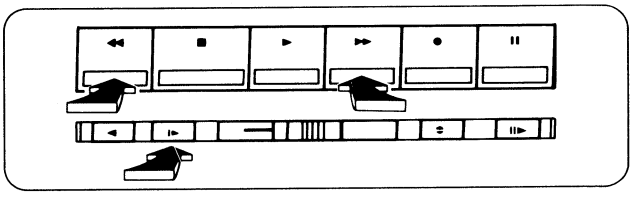

❹ Press the Reset Button at the point where the Insert Recording is to finish, to set the Tape Counter to "0000", and set the Memory Switch to ON.

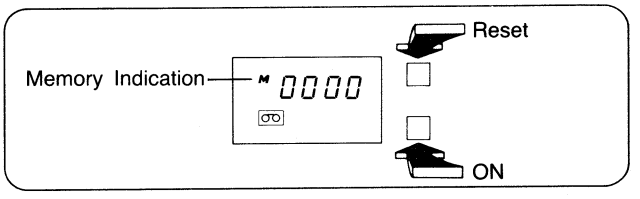

- Do not set the Memory Switch to OFF during Insert Recording.
- Ensure that the Tracking Control is adjusted properly before starting Insert Recording.

❺ Press the Review, Cue, Play or Slow Buttons to find the point where the Insert Recording is to start.

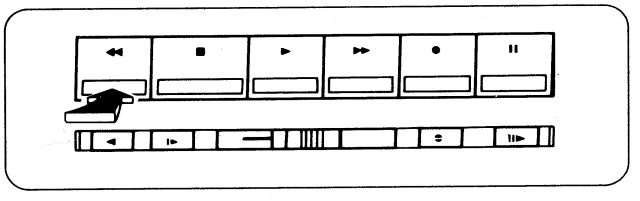

❻ Press the Pause/Still Button at the point where the Insert Recording is to start.

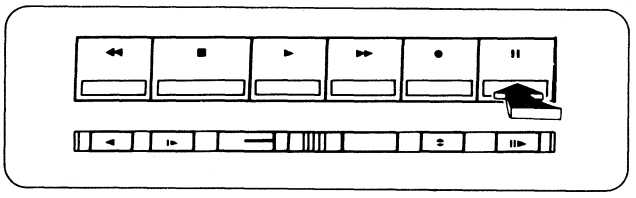

❼ Press the Audio Dub Button together with the Record Button.

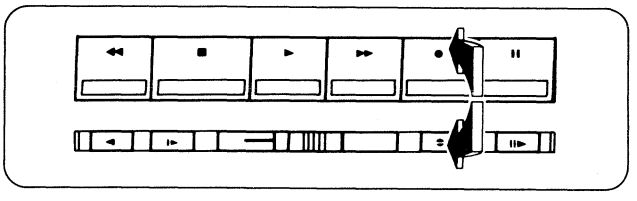

- The VTR uses the Audio Dub Button in the Insert Recording mode.

❽ Start operating the camera or playback of the second video recorder, which you record from.

- During Insert Recording pause operations cannot be performed using the camera's start/stop switch.

❾ The Insert Recording will start as soon as the Pause/Still Button is pressed again.

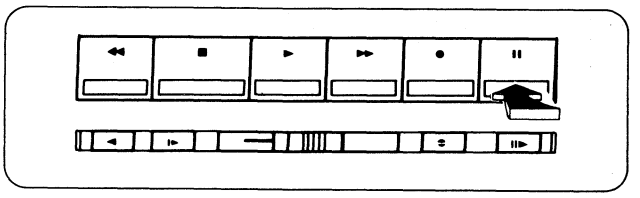

❿ The Insert Recording will finish at the point where the Tape Counter was reset to "0000", and the VTR will be switched over to the Still mode. However, you can press the Pause/Still Button to suspend the Insert Recording at any time, before this point is reached.

- If the inserted part is recorded from another VTR, the picture quality may be slightly inferior, as it is a second generation recording.
- The sound will not be recorded during Insert Recording, as explained in "AUDIO DUBBING" and "CAMERA RECORDING".
- The picture in the inserted part may be affected by some beat noise and colour blotching, but this is not an indication of trouble.

ORDER NO. VRD-8207-110

Service Manual

Video Cassette Recorder

Vol. 2

Panasonic VHS

NV-777 -E -EG -B

Mechanical Adjustment Procedures
Electrical Adjustment Procedures

SPECIFICATIONS

Power Source:	220V AC 50/60Hz (NV-777-E, EG) 240V AC 50/60Hz (NV-777B)
Power Consumption:	Approx. 38 watts
Television System:	CCIR: 625 lines, 50 fields PAL colour signal (NV-777-E/-B) CCIR: 625 lines, 50 fields PAL/SECAM (DDR) colour signal (NV-777-EG)
Video Recording System:	2 rotary heads, helical scanning system Luminance: FM azimuth recording Colour signal: converted subscarrier phase shift recording
Audio Track:	1 track
Tape Format:	Tape width 12.7mm high density tape
Tape Speed:	23.39mm/s
Record/Playback Time:	240 min. with NV-E240
FF/REW Time:	Less than 4.5 min. with NV-E180
Heads:	Video: 3 rotary heads 1 pair for normal recording and playback (R-L Head) 1 pair for trick play (L-L′ Head) (field still and slow) Audio/Control: 1 stationary head Erase: 1 full track erase
Input Level:	Video: VIDEO IN connector (BNC) 1.0Vp-p, 75Ω terminated Audio: LINE IN jack More than −20dB, 50kΩ
Output Level:	Video: VIDEO OUT connector (BNC) 1.0Vp-p, 75Ω terminated Audio: LINE OUT jack −6dB, less than 1kΩ RF Modulated: UHF channel 36 ± 4CH 73dBμ ± 4dBμ 75Ω terminated
Weight:	10.4kg
Dimensions:	430(W) × 115(H) × 372(D)mm
Accessory Supplied:	1 pc. DIN-RF Cable VJA0130 1 pc. Video Cassette Tape (NV-777-E/-B) 1 pc. Wireless Remote Controller, NV-A17-E
Optional Accessories:	Video cassette tape: NV-E240 Approx. 344m, 240 min. NV-E180 Approx. 258m, 180 min. NV-E120 Approx. 174m, 120 min. NV-E60 Approx. 88m, 60 min. Video Camera, WV-2600E, WV-3000E, WV-3200E

Weight and dimensions shown are apparoximate.
Specifications are subject to change without notice.

Panasonic

Matsushita Electric Trading Co., Ltd.
P.O. Box 288, Central Osaka Japan

CONTENTS

SPECIFICATIONS .....Cover
MECHANICAL ADJUSTMENT PROCEDURES 2- 1
DISASSEMBLY OF CABINET PARTS 2- 1
1. Disassembly Flowchart 2- 1
2. Detailed Disassembly Method 2- 1
3. P.C.Board Opening Method 2- 2
ADJUSTMENT PROCEDURES 2- 3
1. Replacement of Upper Cylinder Unit 2- 3
2. Replacement of DD Cylinder Unit 2- 4
3. Adjustment of Safety Switch 2- 4
4. Confirmation of Pressing Force of Pressure Roller ... 2- 5
5. Position Adjustment of Tension Post 2- 5
6. Confirmation/Adjustment of Brake Torque 2- 6
7. Confirmation of Takeup Torque 2- 6
8. Measurement and Adjustment of Back Tension 2- 7
9. Height Adjustment of Reel Tables 2- 8
10. Height Adjustment of Tape Guide Post 2- 9
11. Height Ajdustment of Pull Out Post 2-10
12. Tape Interchangeability Adjustment 2-11
13. Adjustment and Confirmation of A/C Head 2-12
14. Adjustmentof Cam Gear and Mode Select Switch 2-14
Servicing Fixtures & Tools 2-17
ELECTRICAL ADJUSTMENT PROCEDURES 2-18
1. Test Equipment 2-18
2. Adjustment Procedures 2-18
2-1. System Control Section 2-18
2-2. Servo Section 2-19
2-3. Luminance & Chrominance Section 2-23
2-4. Audio Section 2-27
2-5. Programmable Timer Section 2-28
2-6. Infrared Receiver Section 2-29
2-7. TV Demodulator Section (NV-777E/EG) 2-30
2-8. TV Demodulator Section (NV-777B) 2-33
LOCATION OF TEST POINTS & CONTROLS 2-36

MECHANICAL ADJUSTMENT PROCEDURES

DISASSEMBLY OF CABINET PARTS

1. DISASSEMBLY FLOWCHART

This flowchart indicated disassembly steps of the cabinet parts and the PC Boards in order to find the item(s) necessary for servicing.
When reassembling, perform the step(s) in the reverse order.

Notes:
1. When removing the Front Panel, work with care not for breaking the locking portion of the panel.

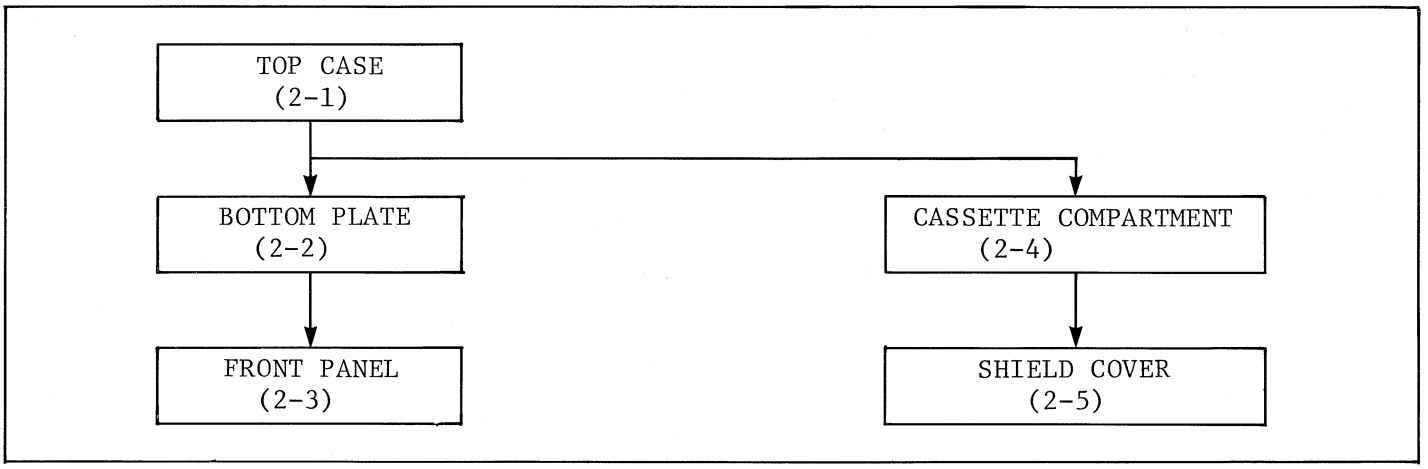

Fig. M1

2. DETAILED DISASSEMBLY METHOD

2-1. Removal of Top Case

Remove the 4 screws (A). Then carefully lift the rear of case to remove.

Note:
Place the cushion under the deck for not being damaged the top portion of the deck.

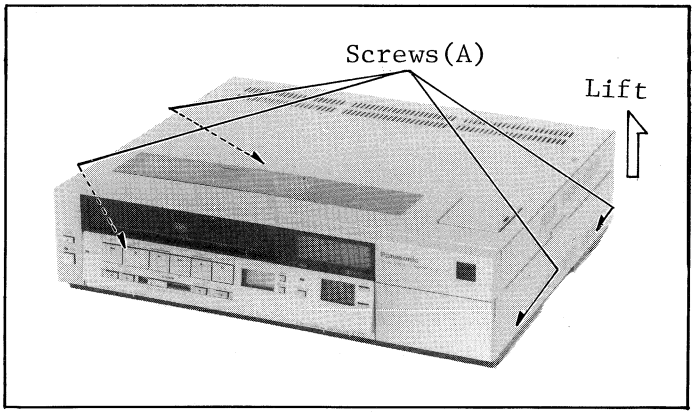

Fig. M2

2-2. Removal of Bottom Plate

Place the deck up side down so the bottom side face upward.
Then remove the 6 screws (B) to remove.

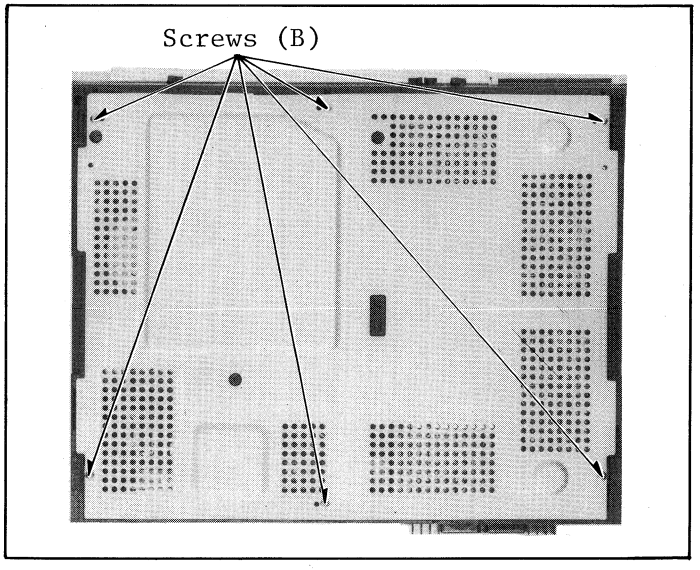

Fig. M3

2-3. Removal of Front Panel

Unlock the 6 locking portions (C). Then hold the top portion of the panel and turn it toward the front of the deck to remove.

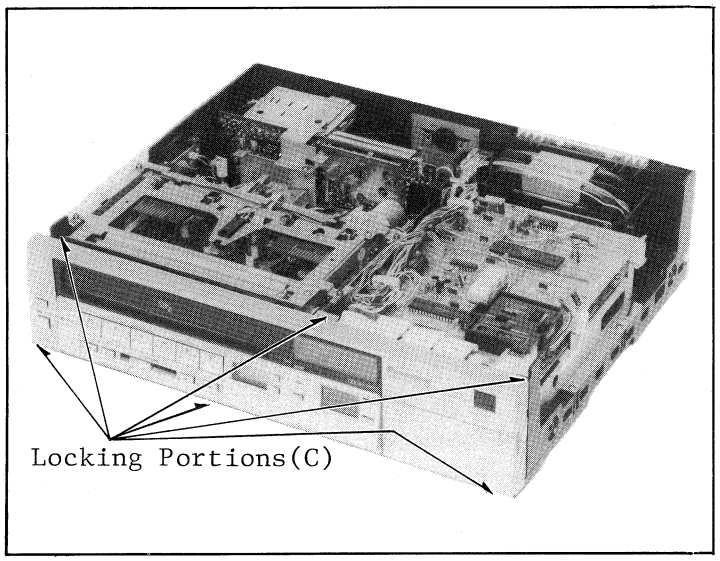

Fig. M4

2-4. Removal of Cassette Compartment

Disconnect the connector P1505 from the Front Loading Motor Connection P.C.B. Loosen 1 screw (D) and remove 4 red screws (E). Then carefully pull out the cassette compartment.

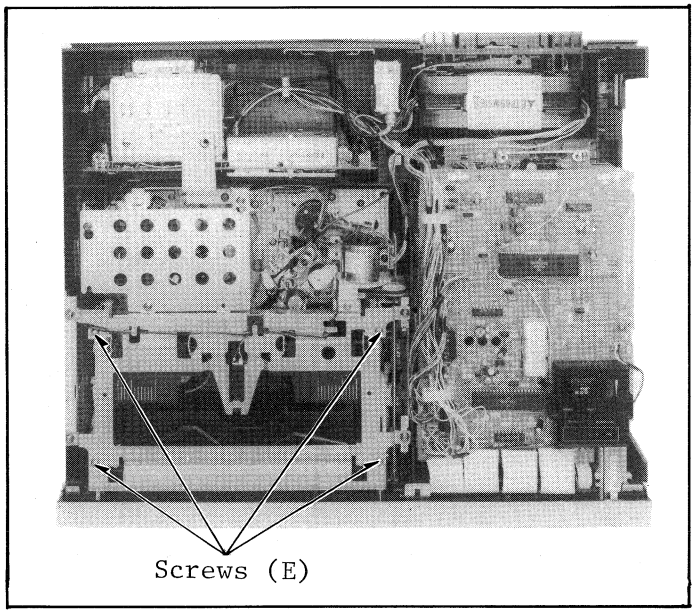

Fig. M5

2-5. Removal of Shield Cover

Loosen 3 screws (F) and remove the Shield Cover.

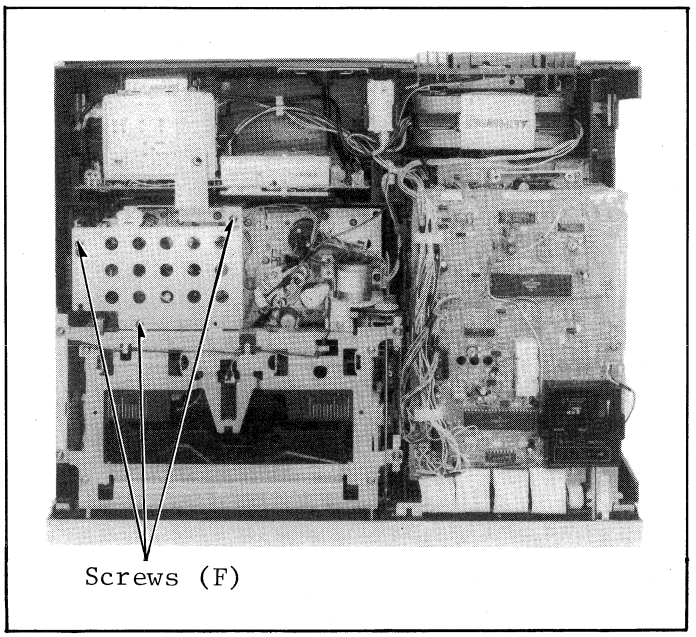

Fig. M6

3. PC Board Openning Method

3-1. Removal of Timer Decoder and Timer Operation PC Board Units

1. Remove the Top Case, Bottom Plate and Front Panel. (Refer to DISASSEMBLY METHOD Item 2-1, 2-2 and 2-3.)
2. Unlock the 4 locking portions (A) and release the some wires from wire clamper.
3. Remove the Infrared Receiver Unit.
4. Lift the Timer Decoder P.C. Board till the 2 locking portions (B) are unlocked and pull it upward to remove.

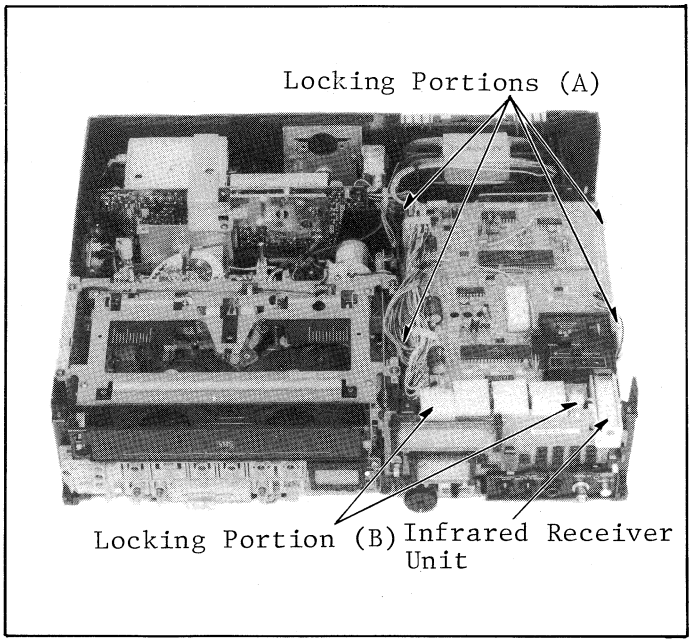

Fig. M7

3-2. Openning the Luminance, Chrominance & Audio PC Board Unit

1. Remove the Bottom Plate. (Refer to Disassembly Method Item 2-2.)
2. Remove 3 screws (A) to openning the Luminance, Chrominance & Audio P.C. Board Unit.

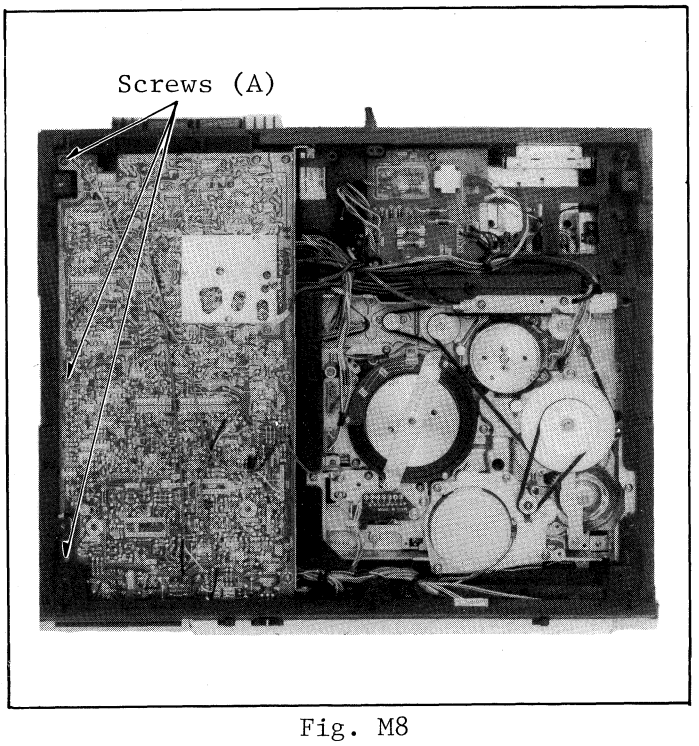

Fig. M8

ADJUSTMENT PROCEDURES

1. Replacement of Upper Cylinder Unit

Work with extreme care when removing or replacing the upper cylinder unit. Do not touch video heads during servicing.

1. Remove the Top Case and Shield Cover. Refer to "Disassembly Method" section.
2. Remove the screw (A) and Discharge Brush Unit. And unsolder the 6 lead wires which are color coded to match lead wires on the head relay board.
3. Remove the 2 screws (B) and gently lift the upper cylinder unit from the shaft.
4. Before reinstalling a new one, clean the DD cylinder shaft and surface engaged with it on the upper cylinder with soft cloth dampened with freon liquid.
5. Reinstall the new one so that the colour code of 6 lead wires match the lead wires on the head relay board and tighten the 2 screws (B).
6. Resolder the 6 leads to head relay board and reinstall the Discharge brush Unit.

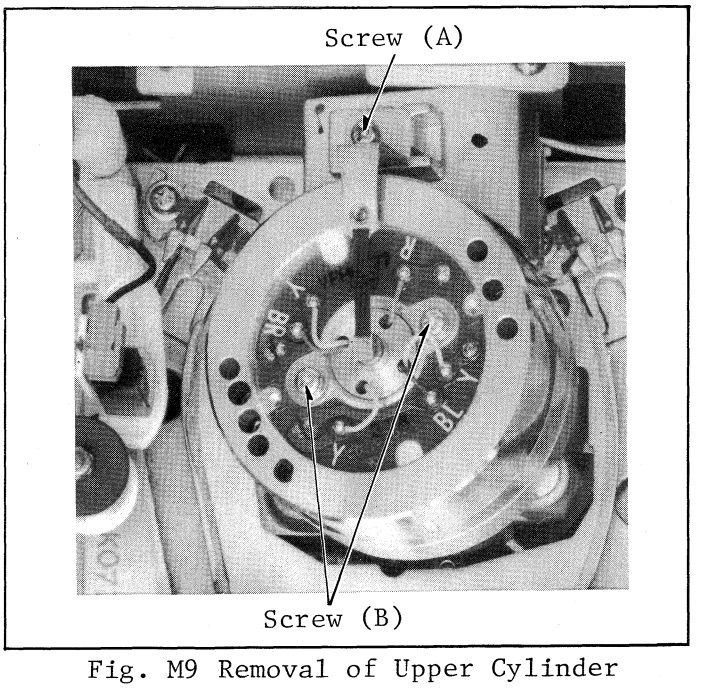

Fig. M9 Removal of Upper Cylinder

Note:

Upon completion of replacement, confirm the performance. And if any further maintenance is required, refer to the "Tape Interchangeability Adjustment" section and perform the necessary items.

2. Replacement of DD Cylinder Unit

Work with extreme care when removing or replacing the DD cylinder unit. Do not touch video heads during servicing.

1. Remove the Bottom plate, Top Case, Front Panel and Shield Cover. Then open the Bottom P.C. Board. Refer to "Disassembly Method" section.
2. Disconnect 3 connectors (P001, P002 and P003) and remove the DD cylinder unit by removing 3 screws (A). Since there is very little clearance between DD cylinder and chassis, remove the cylinder gently and carefully. The P001 is connected to the Servo Section, the P002 is connected to the Video Section and the P003 is Connected to the motor connection P.C. Board.

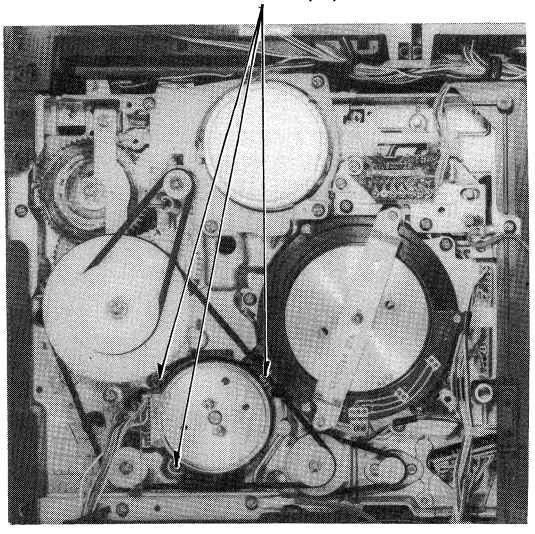

Fig. M10 Removal of DD Cylinder

For P002, first remove the shield case and disconnect the P002.

Note:
Pay particular attention to how these wires are routed along the chassis so that proper lead dress can be restored when the DD cylinder is reinstalled.

3. Remove the upper cylinder unit from the DD cylinder and reinstall it on new one. To perform this step, refer to "REPLACEMENT OF UPPER CYLINDER UNIT" section.
4. Reinstall the new DD cylinder unit to the chassis and restore the leads, connect the P001, P002 and P003, and recover the shield case.

Note:
Upon completion of replacement, confirm the performance. And if any further maintenance is required, refer to the "Tape Interchangeability Adjustment" section and perform the necessary items.

3. Adjustment of Safety Switch

* Specification
  When the cassette tape with tab is used, Switch turns on and without tab switch is kept off.
* Equipment Required:
  Cassette Holder Fixture (VFK0188)
  Retaining Ring Remover (VFK0145)

1. Remove the Top Case, Bottom Plate, Front Panel and the Cassette Compartment, and Open the Video, Colour and Audio P.C. Board Unit.
2. Remove the retaining ring by the retaining ring remover and pull out the Brake Arm (L) Unit.
3. Slightly loosen the 3 screws (A) and (B), and place the fixture.

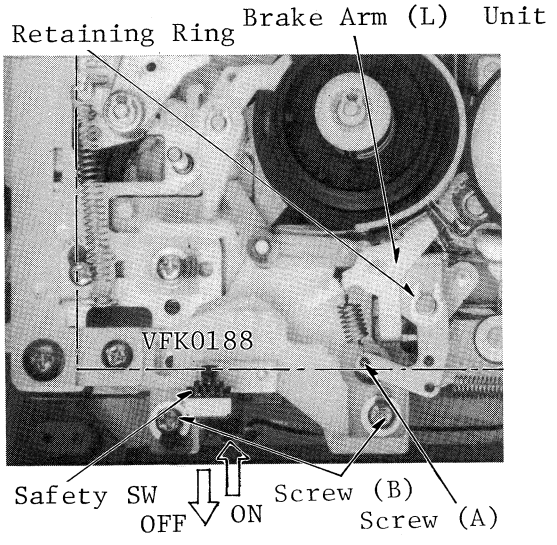

Fig. M11

4. Connect the oscilloscope to P6015-1 and set it to D.C position.
5. Turn the switch base counterclockwise and then slowly twin it clockwise until the switch turns on (Indication of the oscilloscope becomes low level from High level) then tighten the 3 screws (A) and (B).
6. Install the Brake Arm (L) unit and install the retaining ring,

7. After the adjustment, confirm that the switch turns on by using a tape with safety tab and off without tab.

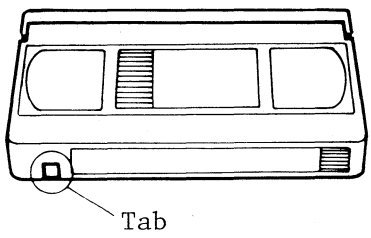

Fig. M12

4. Confirmation of Pressing Force of Pressure Roller

Equipment Required:
Fan-Type Tension Gauge (VFK66)

1. Remove the Top Case.
2. Playback the cassette tape.
3. Set Fan-Type Tension Gauge to the part (A) of Main Pressure Arm Unit.
4. Press the Arm with the Gauge, in the direction indicated by the arrow as shown below.

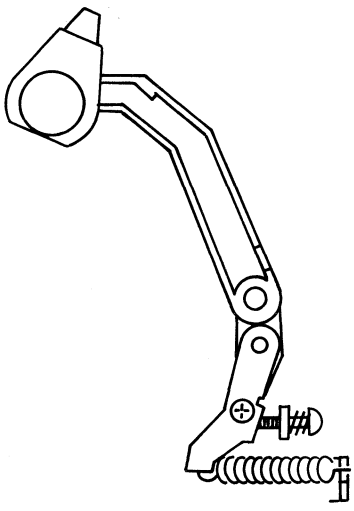

Fig. M13

5. Confirm that reading of the Tension Gauge is 1,600 ± 350 g at the moment of tape stop.

5. Position Adjustment of Tension Post

* Equipment Required:
Tension Post Adjustment Plate ..... (VFK0187)
Fine Adjustment Screw-driver ..... (VFK0136)

1. Remove the top case Bottom Plate, Front Panel, and cassette compartment.
2. Insert a Cassette Tape, and Push the play button for loading. As soon as the loading is completed, take out the AC plug.
3. Place the adjustment plate and slightly loosen a screw securing the tension band braket.
4. Insert the fine adjustment screw-driver into the hole and move the tension band bracket in either of direction so the tension post just touches the fixture.

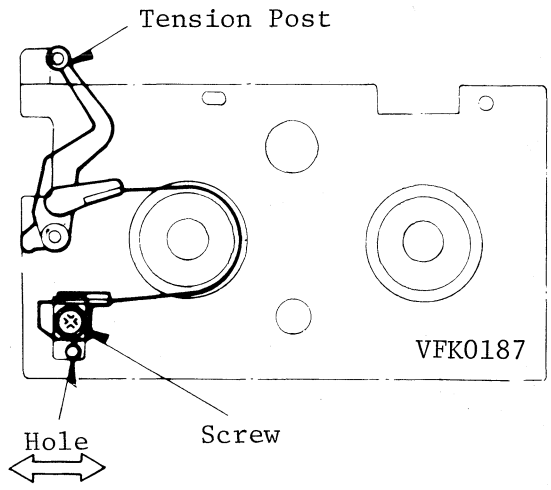

Fig. M14 Adjustment of Tension Post

6. Confirmation/Adjustment of Brake Torque

A. Confirmation Procedure
Equipment Required:
Torque Gauge ..... (VFK0133)
Adaptor for Gauge ... (VFK0134)

Spec.

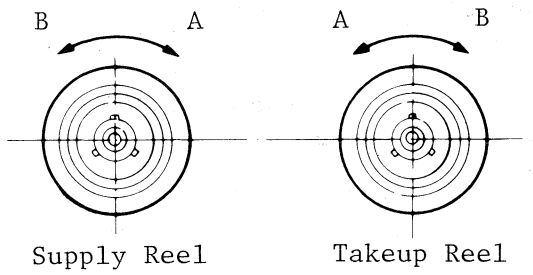

	A	B
Takeup	450 ∿ 800 g-cm	70 ∿ 150 g-cm
Supply		

Fig. M15 Spec. of Brake Torque

1. Remove the Top Case, Bottom Plate, Front panel and the cassette compartment.
2. Attach the adaptor to the torque gauge and place the deck in STOP mode.
3. Place the torque gauge on the reel table.
   The weight of gauge should be free against the reel table.

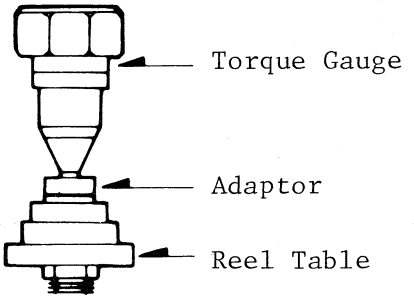

Fig. M16 Measuring Method

4. Turn torque gauge in the direction indicated in the Fig. M15 until the brake begins slipping.

B. Adjustment Procedure
To adjust the brake torque, change the notch.

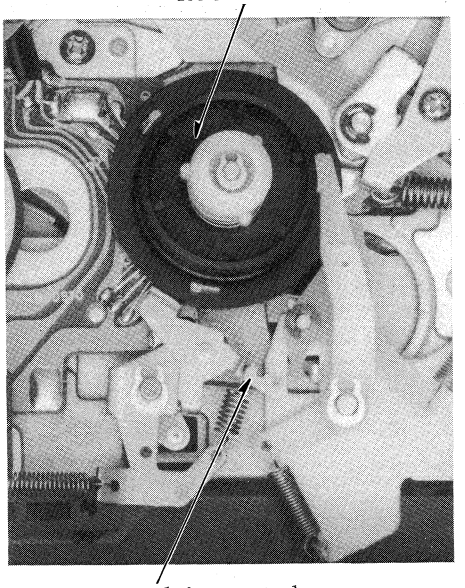

Fig. M17

Note:
If proper brake torque could not obtained by changing the spring position, clean the rotating surface of the reel table with soft cloth and confirm torque before replace it.

7. Confirmation of Takeup Torque

* Equipment Required:
  Dial Torque Gauge ... (VFK0133)
  Adaptor for Gauge ... (VFK0134)
* Specification
  in F.F. ..... more than 400 g-cm
  in REW ..... more than 400 g-cm

1. Remove the Top Case, Bottom Plate, Front Panel and the Cassette Compartment.
2. Insert a cassette tape and attach the adaptor to the torque gauge.
3. Set a torque gauge to the Take-up reel Table, push the FF button and read torque on gauge.

Note:
While measuring, the weight of gauge should not rest on reel table.

4. Set the torque gauge to the Supply Reel Table, press the rewind button for rewind mode. And read the torque on gauge.

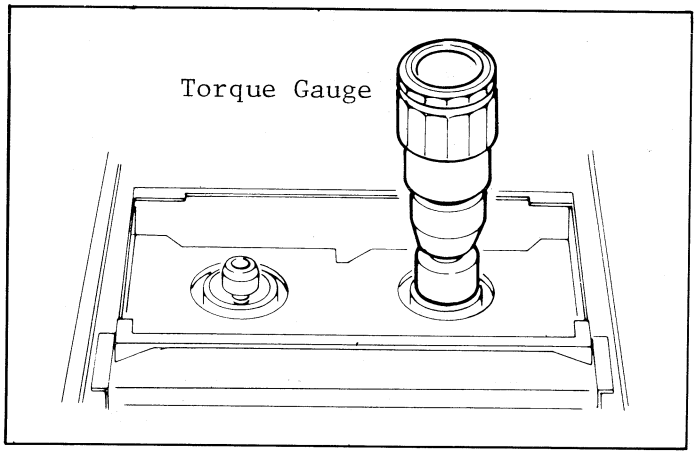

Fig. M18 Measuring Method

Note:
There are no-adjustment here.
If the torque readings are off considerably, rollers or idlers or reel tables may need replacement.

8. Measurement and Adjustment of Back Tension

A. Measurement Procedure
* Equipment Required:
Back Tension Meter (Tentelometer)
VHS Cassette Tape (120 minutes tape)
* Specification: 25 ∿ 30 g

1. Remove the Top Case and Shield Cover.
2. Pull the erase head in the direction indicated by the arrow and hold it by adhesive tape.
3. Play back the cassette tape from its beginning and wait until tape running has stabilized. (for approx. 10 to 20 seconds)
4. Insert tension meter in tape path and confirm reading.

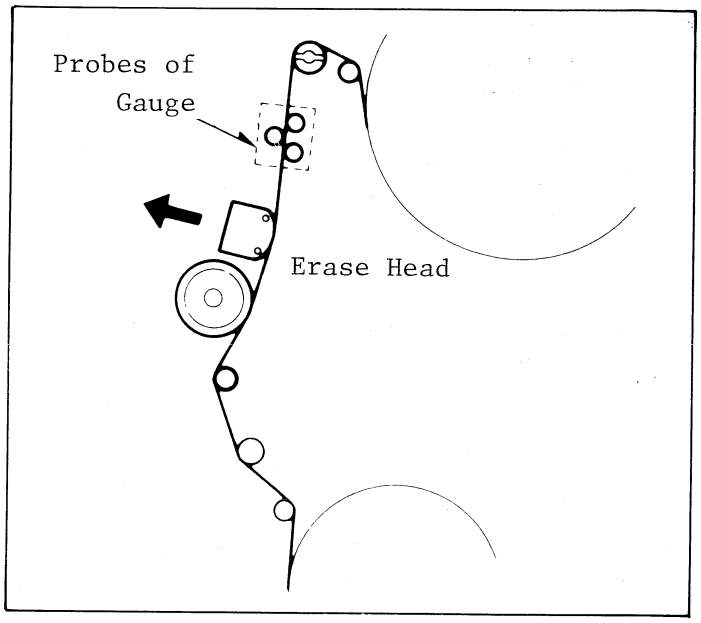

Fig. M19 Measurement of Back Tension

Notes:
1. Make sure that the three probes of the meter are all in good contact with tape, but out of contact with supply inertia roller while measuring.
2. It is recommended to be measured three times as tension meter is very sensitive.

(Adjustment Procedure of this section described on next page.)

B. Adjustment Procedure

* Equipment Required:
  Fine Adjustment Screwdriver ..... (VFK0136)

1. Remove the Top Case, Bottom Case, Front Panel Cassette Compartment and the Shield Cover.
2. Loosen a screw (A) and insert the fine adjustment screwdriver into the hole (B).
3. Move the adjustment driver in either of direction indicated by the arrow to obtain the specified tension. Turn the driver clockwise to raise the tension, counterclockwise to lower it.
4. Tighten the screw (A), and set the Cassette Compartment verify the tension with the meter once again.

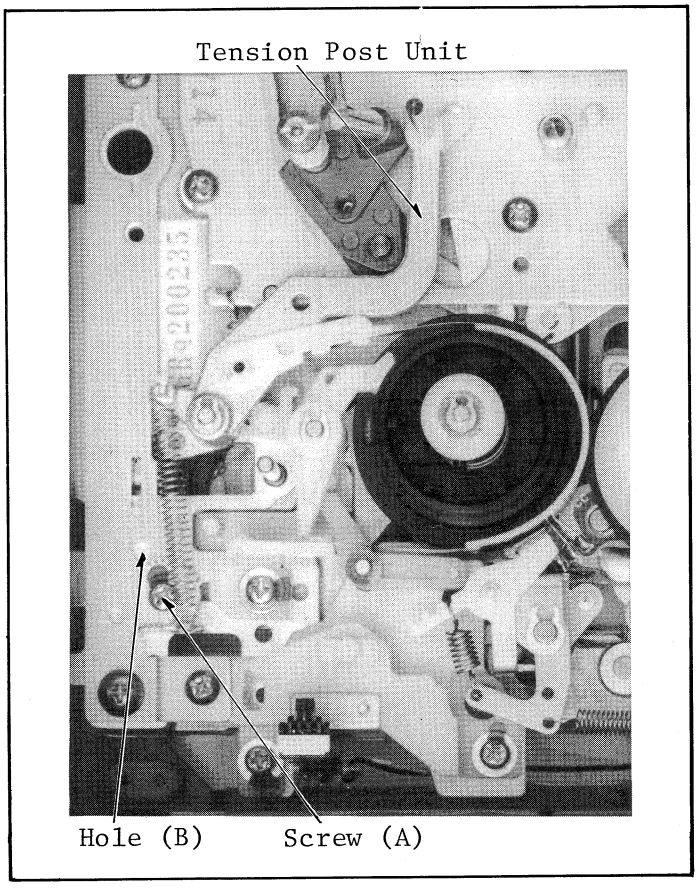

Fig. M20

5. After above the adjustment is completed, remove the adhesive tape.

9. Height Adjustment of Reel Tables

* Equipment Required:
  Post Adjustment Plate .. (VFK0138)
  Reel Table Height Fixture ..... (VFK0139)
* Specification ..... 0 ∿ 0.2mm

1. Remove the Top Case Bottom Plate, Front Panel and the Cassette Compartment.
2. Place the post adjustment plate, put the dial gauge on it and set the dial gauge to zero "0" with the condition that scraper of gauge touches the cut-out portion of the plate.

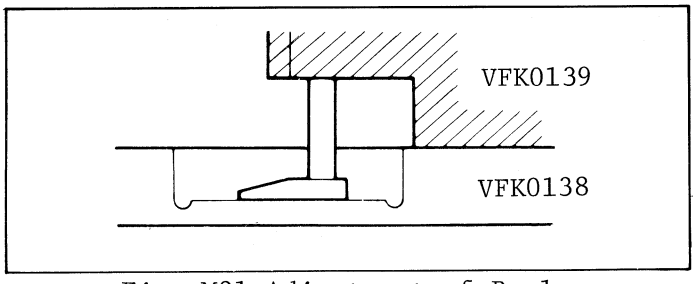

Fig. M21 Adjustment of Reel Table Height-(1)

3. Then measure the top portion of reel table and confirm the difference against the condition just performed in the former step. Also perform the same measurement and confirmation for other reel table.

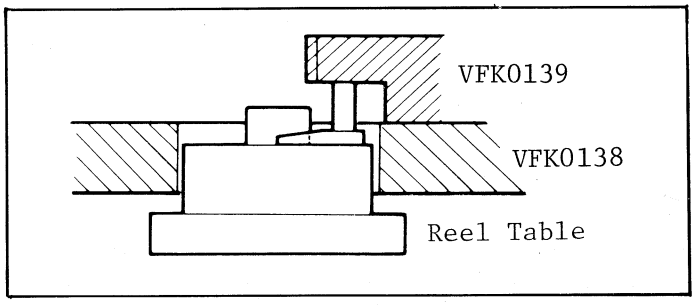

Fig. M22 Adjustment of Reel Table Height-(2)

4. If the difference is more than 0.1mm (high or lower), adjust the height of reel table to obtain the specified height.
5. For the adjustment, change the poly-slider washer located under the reel table. The washers of following thicknesses are available.

Washer / Thickness	Part No.
0.13mm	XWXV3Z6
0.25mm	XWXV3A6
0.5mm	XWXV3D6

Fig. M23

10. Height Adjustment of Tape Guide Post

* Equipment Required:
Hex. Wrench, (0.9mm) ... (VFK0146)
Post Adjustment Plate .. (VFK0138)
Reel Table Height Fixture ..... (VFK0139)
Nut Driver ..... (Purchase locally)
Post Adjustment Screwdriver ..... (VFK0137)

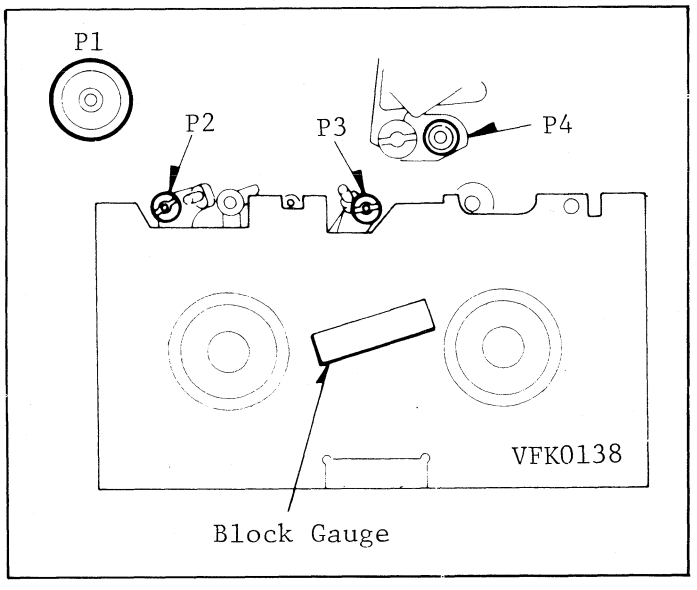

Fig. M24 Location of Posts

1. Remove the Top Case, Bottom Plate, Front Panel, Cassette Compartment and the Shield Cover.
2. Place the post adjustment plate on the 4 cassette support pins correctly and put the block gauge on it. And fit the block gauge against each post for confirmation that the post is positioned lower or higher against the adjustment plate.
2. Loosen the locking hex. screws of posts (P2 & P3), then rotate the top of post counterclockwise with post adjustment screwdriver to raise them as the condition (C) shown below.
3. Then slightly press the block gauge against the post sleeve and rotate the top of the post clockwise with post adjustment screwdriver until to obtain the condition (A) shown below.

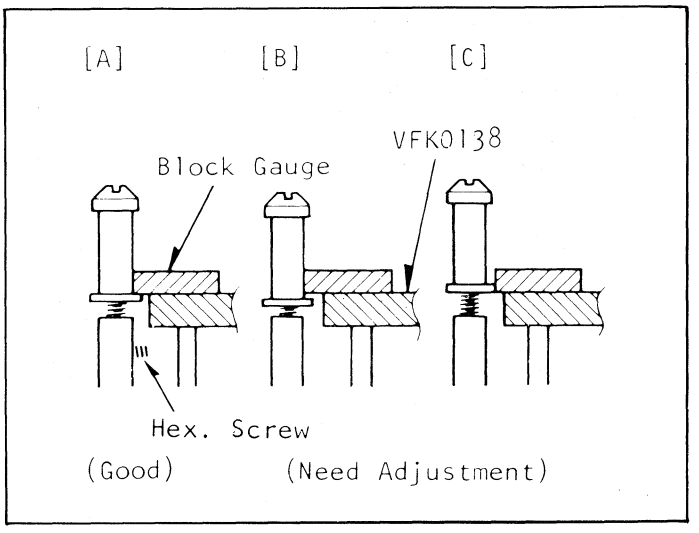

Fig. M25 Height Adjustment

5. Make the same adjustment for posts (P1 & P4) with nut driver.
6. After above the adjustment is completed, tighten hex. screws on the P2 and P3.

11. HEIGHT ADJUSTMENT OF PULL OUT POST

Notes:

1. The adjustment should be performed after the adjustment of P4 as the spec is based on height of P4.
2. The adjustment should be performed in the loading completion mode.
3. Unless the replacement or adjustment of this post is required the adjustment nut should not be turned.

* Equipment Required
Post Adjustment Plate ..... (VFK0138)
Reel Table Height
Fixture ..... (VFK0139)
Nut Driver ..... (Purchase Locally)

* Specification ..... 0.06±0.02mm

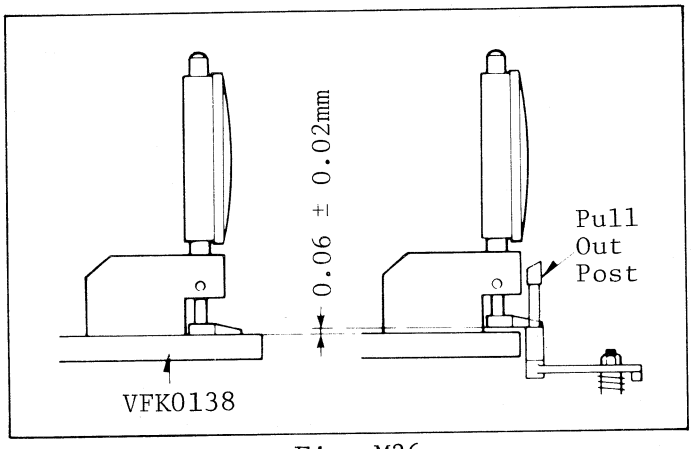

Fig. M26.

1. Remove Top Case, Bottom Plate, Front Panel and the cassette compartment.
2. Turn power switch on, insert a cassette tape and push the play button for loading.
3. As soon as loading is completed plug off.
4. Place the adjustment plate, put the height fixture on the plate and set dial gauge to zero "0" with condition the scraper touches on the plate.

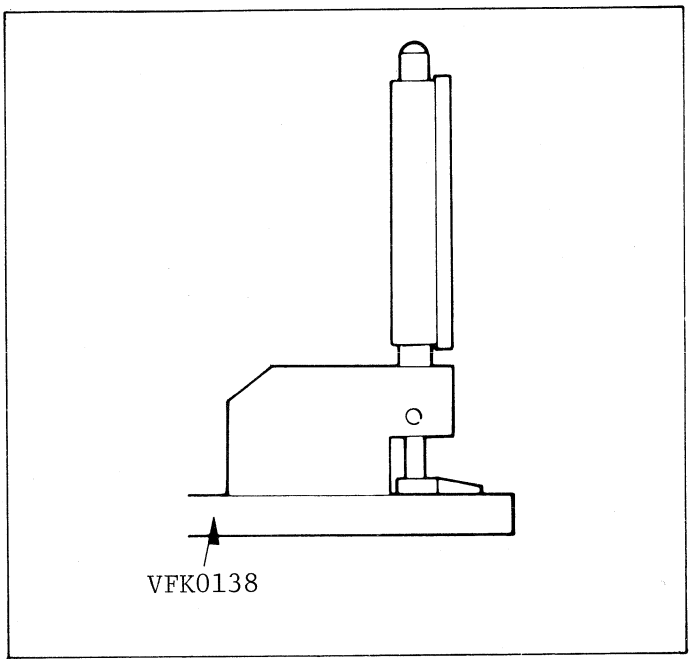

Fig. M27.

5. First, slightly lower the post by turning the nut clockwise. Fit the scraper to the post so the condition becomes as shown.

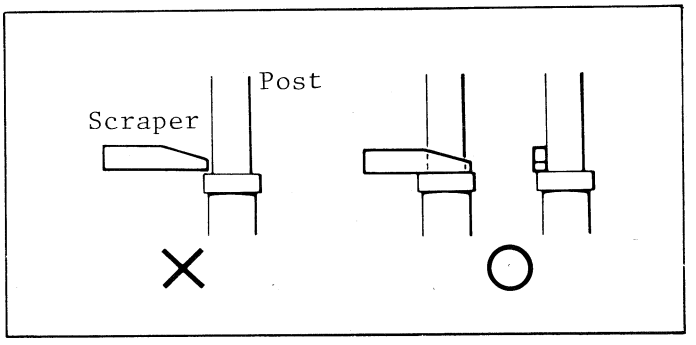

Fig. M28.

6. Then slowly and slightly turn the nut till the gauge reads specified
7. Plug in for unloading before reinstall the cassette compartment.

12. Tape Interchangeability Adjustment

* Equipment Required
  Alignment Tape ..... (VFM8100H3D)
  Post Adjustment
  Screwdriver ..... (VFK0137)

1. Remove the Top Case, Botton Plate, and the Shield Plate.
2. Set the tracking control into the detent (fixed) position.
   And connect the oscilloscope th the TP3011.

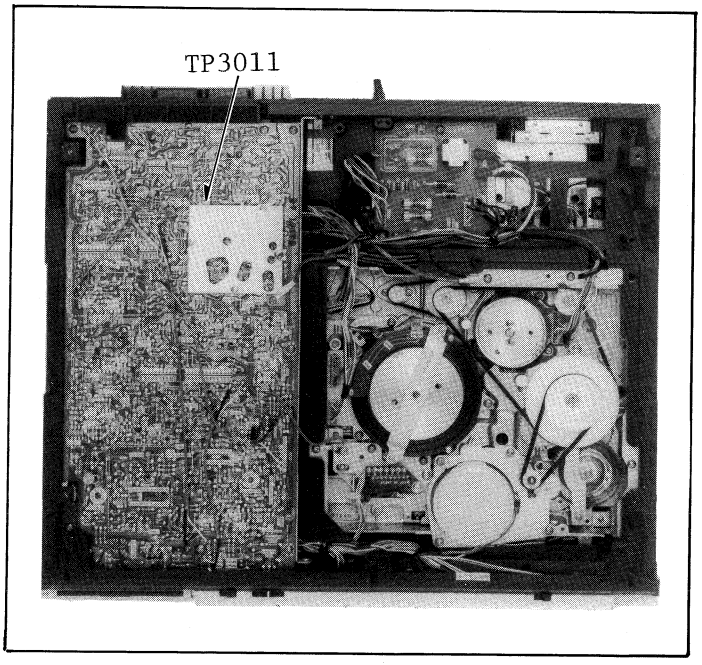

Fig. M29

3. Playback the alignment tape VFM8100H3D, adjust posts P2 and P3 by watching the scope display (Envelope of TP3011 on Main PC Board) so the RF envelope on the scope becomes as flat as possible.
   (V1/V-max. $\geqq$ 0.7, V2/V-max. $\geqq$ 0.8)

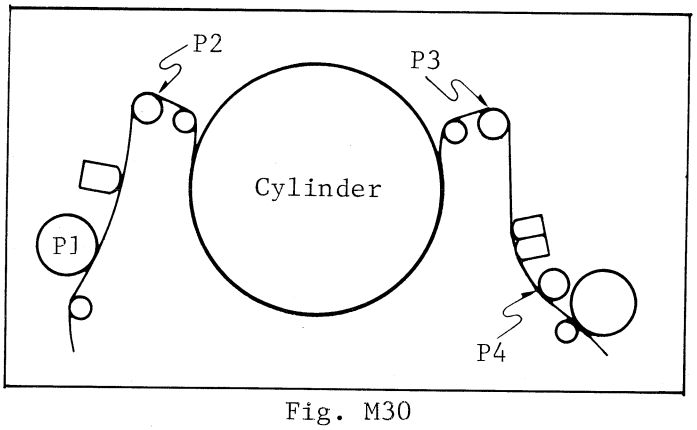

Fig. M30

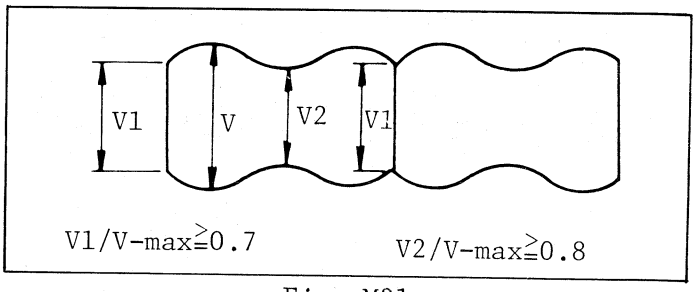

Fig. M31

4. When the scope display is as follows, adjust the height of P2 as shown below.

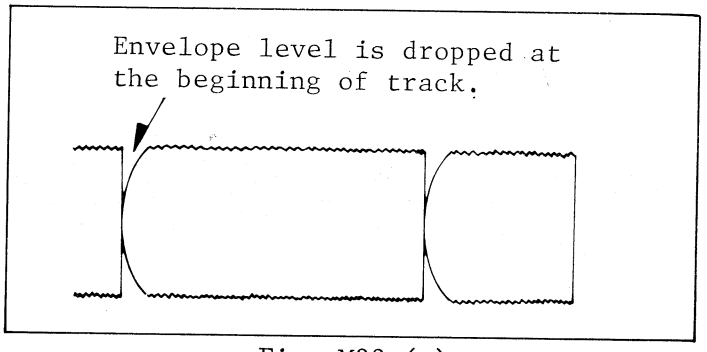

Fig. M32-(a)

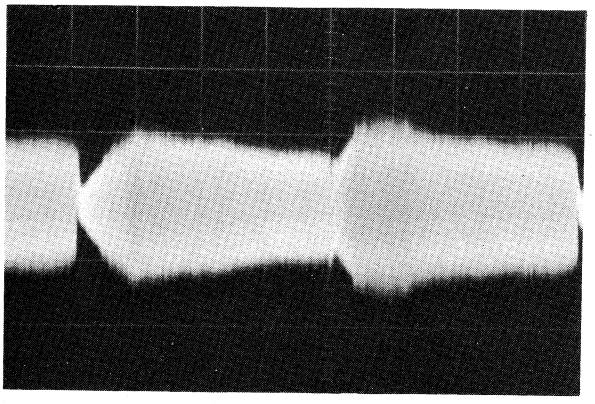

Fig. M32-(b)

5. When the scope display is as follows, adjust the height of P3 shown below.

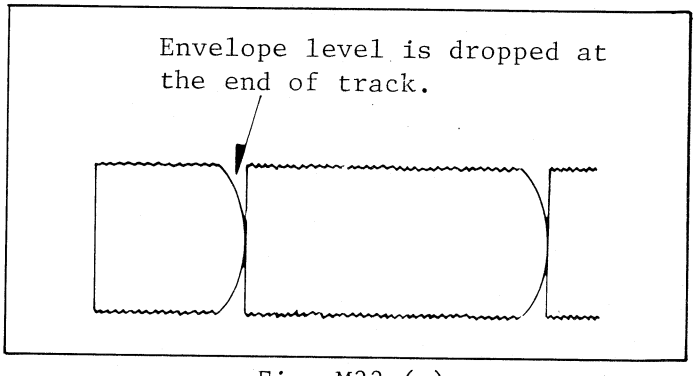

Fig. M33-(a)

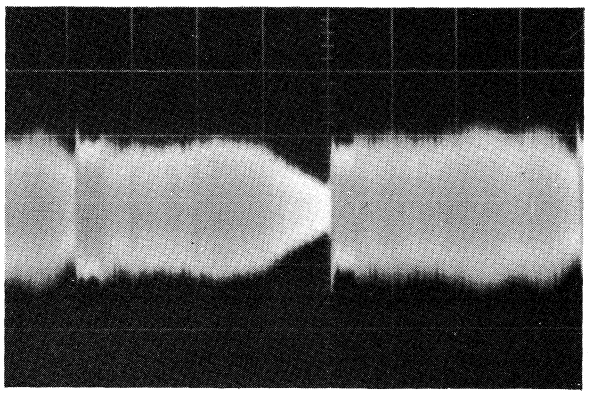

Fig. M33-(b)

6. The scope display with P2 and P3 adjusted correctly should become as shown below.

Envelope is adjusted properly

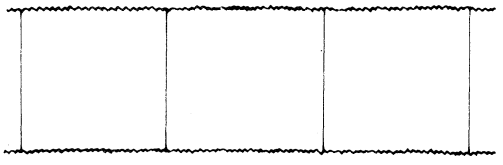

Fig. M34-(a)

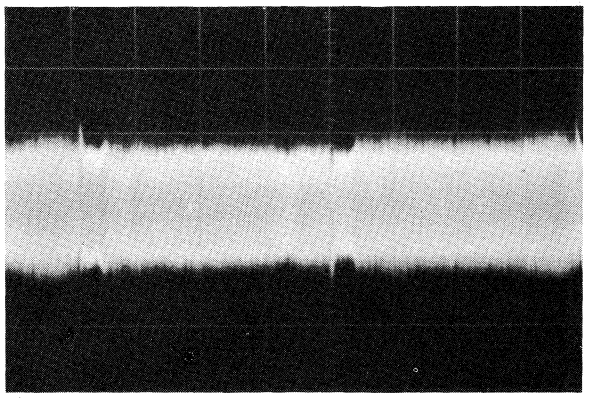

Fig. M34-(b)

7. When the adjustment is required, turn the top of post with the post adjustment screwdriver.

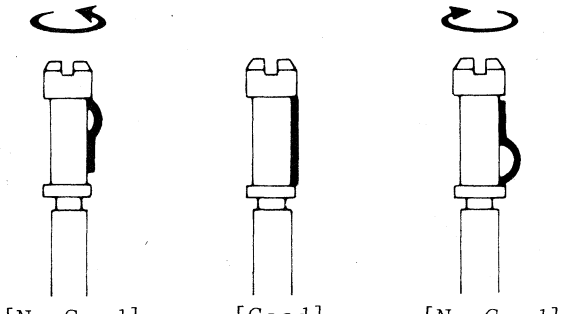

Fig. M35

13. Adjustments and Confirmations of A/C Head

14-1. Horizontal Position Adjustment of A/C Head

* Equipment Required:
  H-Position Adjustment Screwdriver
  ..... (VFK0189)

1. Set the tracking control into the detent (fixed) position. And connect the oscilloscope to the TP3011.
2. Playback the alignment tape VFM8100H3D and confirm the envelope figure.
3. If the adjustment is required, set the H-position adjustment screwdriver into the slot of the adjustment nut and rotate in either of direction to obtain maximum envelope output.

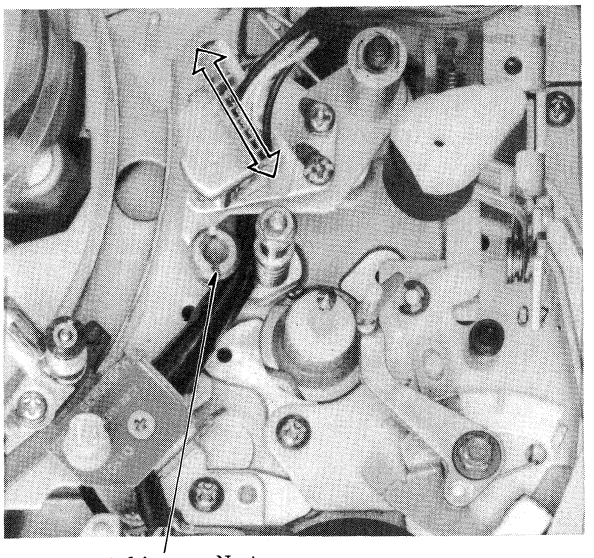

Fig. M36

13-2. Confirmation/Adjustment of A/C Head Height

A. Confirmation Procedure
Looking at the lower edge of the control head with the tape running, ensure the lower edge of tape runs along the lower edge of the control head.

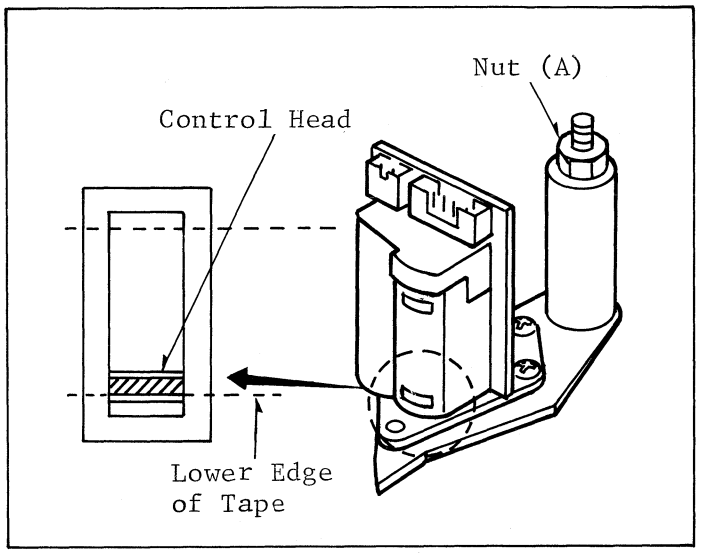

Fig. M37

B. Adjustment Procedure
Slightly turn the nut (A) in either directions to correct it. Turn clockwise to lower the head and counterclockwise to raise it.

Note:
Unless the A/C Head is replaced, this adjustment should not be done.

13-3. Tilt Adjustment of A/C Head

* Equipment Required:
Hex. Wrench, (1.5mm) ... (VFK76)

A. Pre-Adjustment Procedure
Playback the tape and confirm the tape runs between lower and top limiters of the post P4. If the lower edge or top edge of the tape turns with waving or frilling, then correct the tilt of the A/C head by turning a hex. screw. (A hex. screw indicated in Fig. M39.)

Note:
Unless the post P4 is pre-adjusted, this pre-adjustment procedure should not be done. (Refer to the section of "Height Adjustment of Tape Guide Posts".

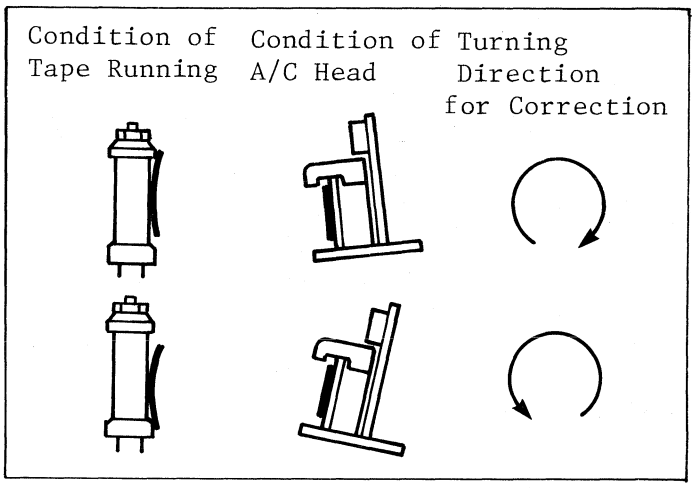

Fig. M38 Tilt Pre-Adjustment

B. Adjustment Procedure

1. Connect the oscilloscope to Test Point TP3011 on the Video Section.
2. Playback the monoscope portion of the alignment tape, VFM8100H3D and adjust the hex. screw so the RF envelope output level becomes maximum.

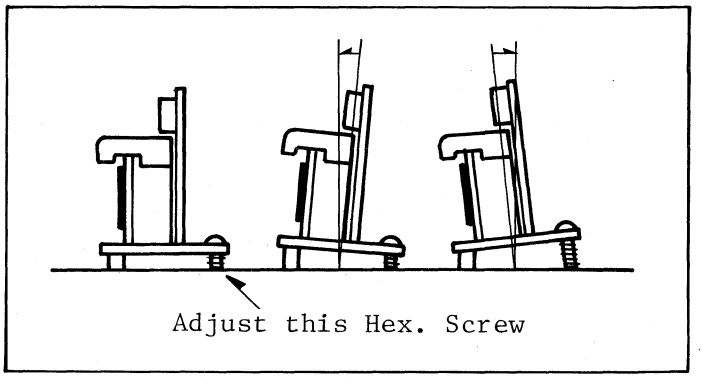

Fig. M39

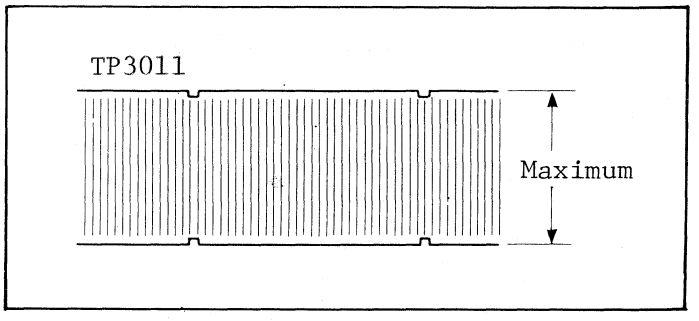

Fig. M40

13-4. Audio Azimuth Adjustment

* Equipment Required:
  VHS Alignment Tape VFM8100H3D

1. Connect the oscilloscope to the audio output on the rear of the deck.
2. Playback the alignment tape(6kHz, Audio) VFM8100H3D.
3. Adjust screw (A) without spring on the head base so the output level becomes maximum.

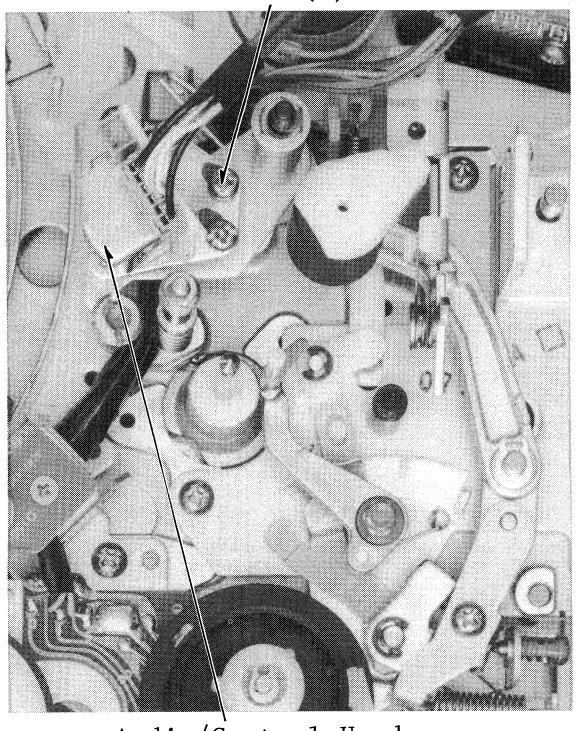

Fig. M41

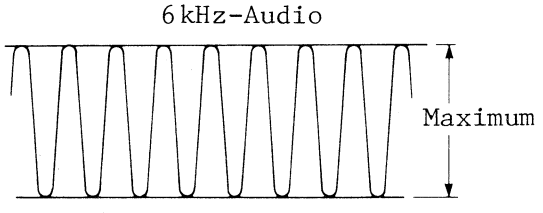

Fig. M42

14. Adjustment of Cam Gear and Mode Select Switch

General Condition:

The mechanism of this model is mostly engaged to the electrical circuit, System Control Circuit, through the mode select switch. Therefore the relation between the mode switch and the cam gear decides all further mechanical movement of the mechanical parts such as levers, gears, rollers and so on.
If the adjustment of this item is performed inproperly, the deck will be unloaded or compulsorily stopped. And it will result being damaged at any mechanical or electrical parts.

Note:
Before the adjustments turn power switch on insert a cassette tape and set the mode select switch to the stop position, and plug off.

A. Adjustment Procedures of Cam Gear

1. Turn Loading gear clockwise until the post 2 and 3 were fully unloaded. The small projection on the loading gear will be top portion under the condition of Unloading Completion.

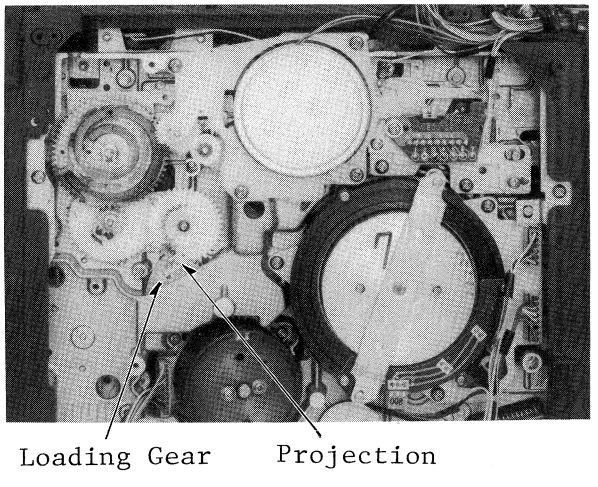

Fig. M43

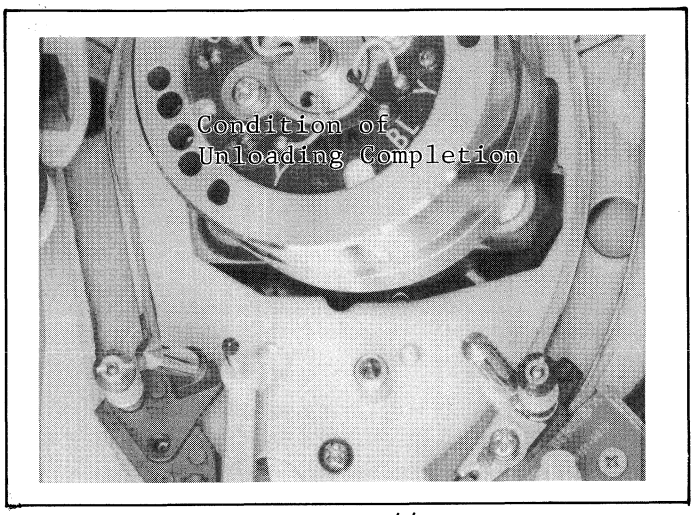

Fig. M44

2. Install the action gear so the hole on the action gear meets the projection on the loading gear. Ensure that the loading gear is still in the condition of the unloading completion.

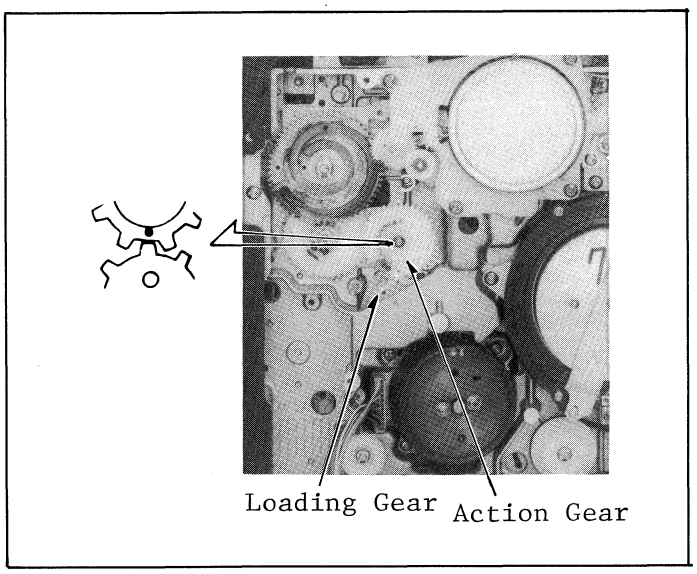

Fig. M45

3. Slowly slide the main rod so the V-shaped mark meet the V-shaped mark of the mode select switch. With the result, main rod and mode select switch are in a position to be stop (unloading completion) mode.
4. Insert the cam gear so the hole (A) on the gear meets the hole on the main rod. To meet the two holes easier, use the small hex. wrench (VFK75) or metal pin.
   Also ensure the two V-shaped marks are fixed.

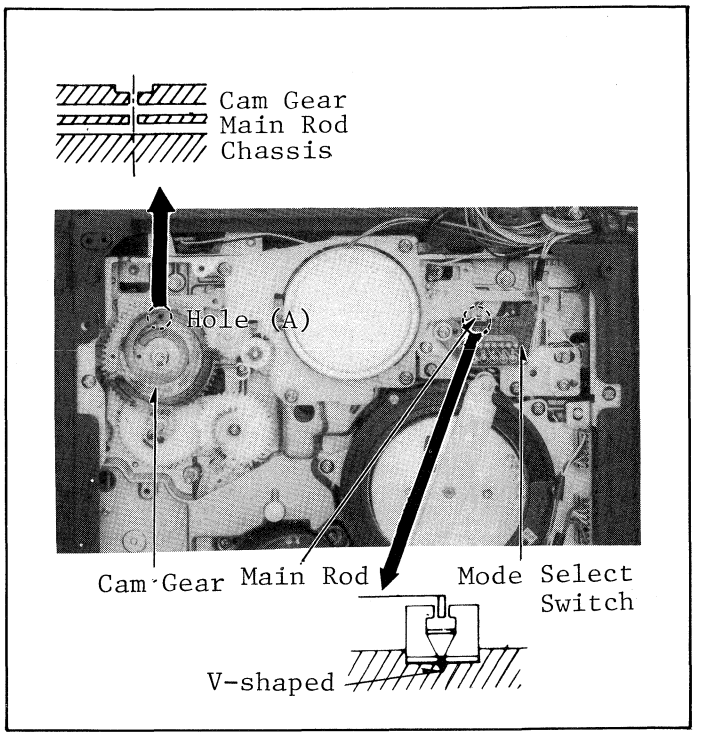

Fig. M46

5. Install the sector gear so the pin on the sector gear meets the inner slot of the cam gear (simple slot side). And install 2 retaining rings to mount cam gear and sector gear.

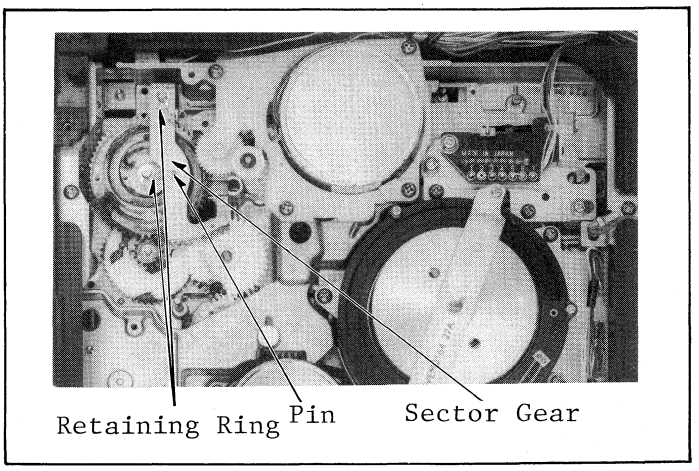

Fig. M47

6. Final figure should become as shown below, and at the same time two V-shaped marks are fixed at the mode select switch.

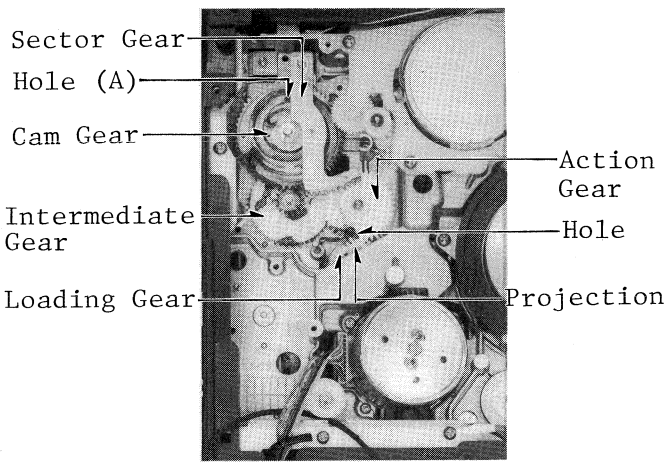

Fig. M48

7. Install the gear protector and tighten the nut for mounting it. And install the large gear so the teeth of it contact the outer teeth of the intermediate gear. Then install a retaining ring to mount it.
8. Install the belts and belt cover and tighten a screw (C). Turn the large pulley in both direction to confirm the smooth movement of this mechanism.

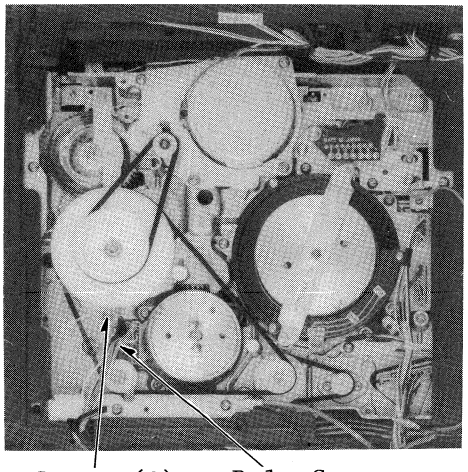

Fig. M49

B. Adjustment Procedures of Mode Select Switch

* Equipment Required:
Fine Adjustment Screwdriver
..... (VFK0136)

1. Fix the main rod in the condition of unloading completion.
2. Slightly loosen two screws (A) and the fine adjustment screwdriver into the hole (B).
3. Turning the fine adjustment screwdriver, adjust the position of the mode select switch so that the two V-shaped marks of the mode select switch just correspond at the same position. Then tighten two screws (A).
4. Make sure that the movement of the deck is in normal condition.

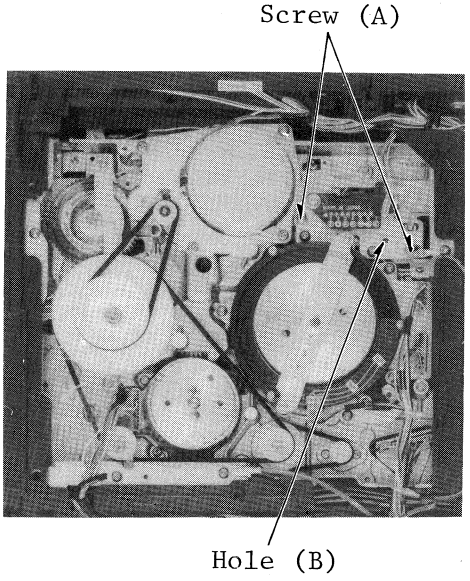

Fig. M50

Servicing Fixtures & Tools

VFM8100H3D VHS Alignment Tape

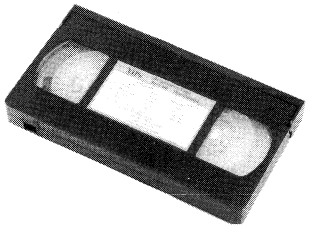

VFK0138 Post Adjustment Plate

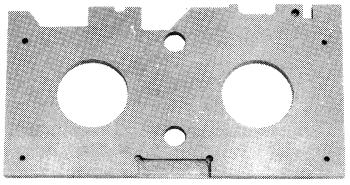

VFK0188 Cassette Holder Fixture

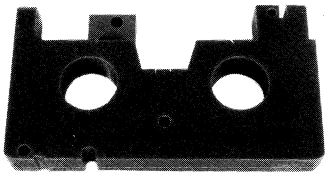

Back Tension Meter
(Tentelometer, Made in U.S.A.)

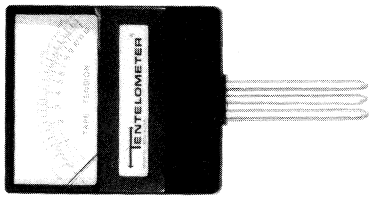

VFK0144 Retaining Ring Remover (3mm)
VFK0145 Retaining Ring Remover (4mm)

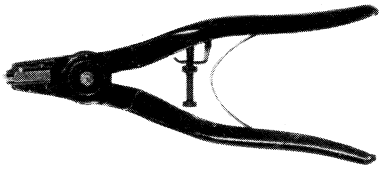

VFK0189 H-Portion Adj. Fixture

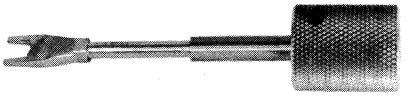

VFK0133 Dial Torque Gauge
VFK0134 Adaptor for VFK0133
VFK0180 (Plastic Clamper Only)

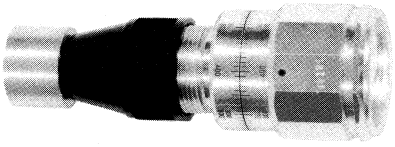

VFK0146 Hex. Wrench (0.9mm)
VFK75 Hex. Wrench (1.25mm)
VFK76 Hex. Wrench (1.5mm)

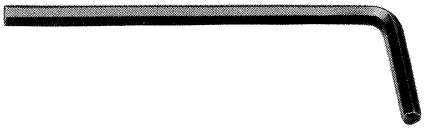

VFK0139 Reel Table Height Jig

VFK0135 Eccentric Screwdriver

VFK0225 Head Tester

VFK66 Fan Type Tension Gauge

VFK0136 Fine Adjustment Screwdriver

Approx.
1.5mm.

Grind the top portion
approximately 2.5mm.

VFK0185 Cleaning Cassette Tape

VFK0141 Capstan Reference Plate

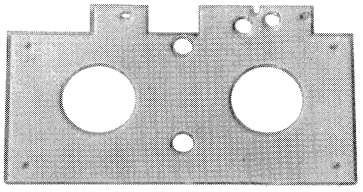

VFK0137 Post Adjustment Screwdriver

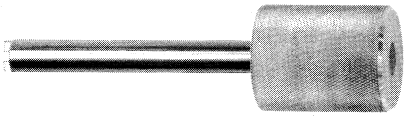

VFK0187 Tension Post Adj. Fixture

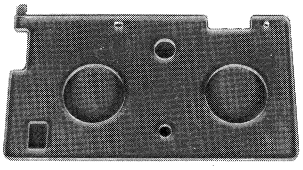

VFK27
Head Cleaning
Stick

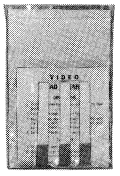

MOR265 Morlytone
Grease

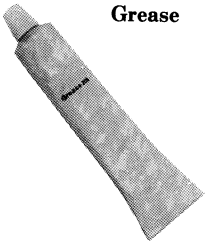

ELECTRICAL ADJUSTMENT PROCEDURES

This section provides complete electrical adjustment procedures which may be required for electronic circuits of VHS video cassette recorder.

1. Test Equipments

To perform the electrical adjustments completely, following equipment is required.

1. VTVM (Vacuum Tube Volt Meter) or DVM (Digital Volt Meter)
   Voltage Range: 0.001 - 50V
2. Dual-Trace Oscilloscope
   Voltage Range: 0.005 - 50V/div.
   Frequency Range: DC - 10MHz
   Probes: 10:1 or 1:1
3. Frequency Counter
   Frequency Range: 0 - 10MHz
4. Signal Generator (Sinewave)
   Frequency Range: 0 - 10MHz
5. Video Sweep Generator
   Frequency Range: 0 - 10MHz
6. Colour Receiver or Monitor TV
7. Plastic Tip Driver
8. VHS Alignment Tape (VFM8100H3D)

2. Adjustment Procedures

These adjustment procedures consist of the following sections.

1. System Control Section.
2. Servo Section
3. Luminance & Chrominance Section
4. Audio Section
5. Programmable Timer Section
6. Infrared Receiver Section
7. TV Demodulator Section (NV-777E/EG)
8. TV Demodulator Section (NV-777B)

2-1. System Control Section

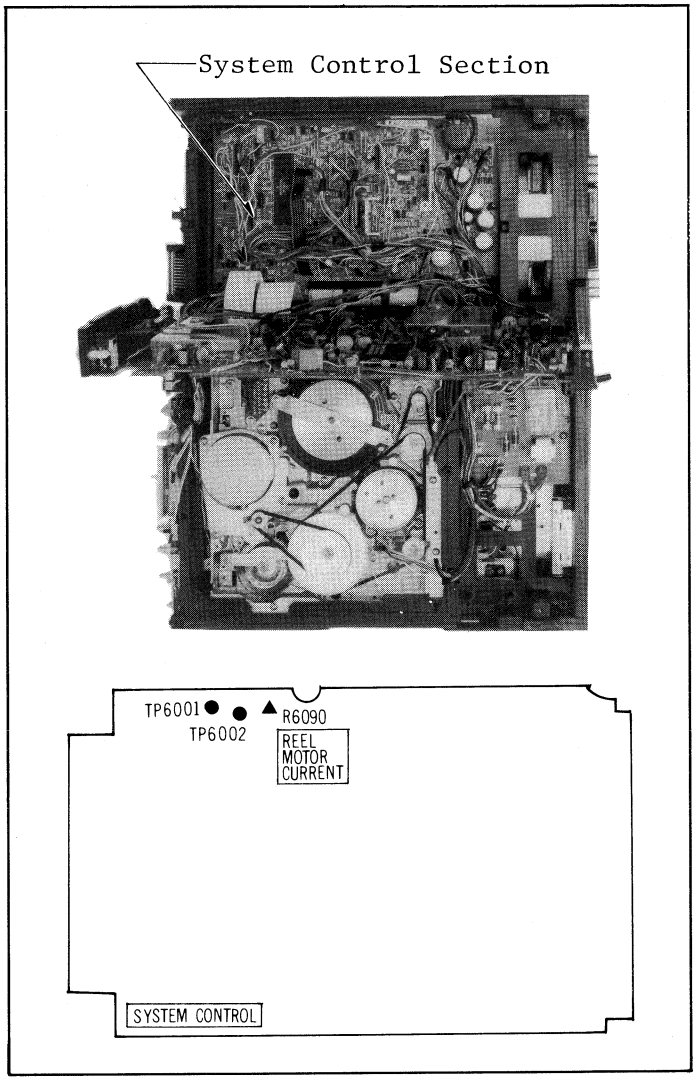

Fig. E1 System Control Section

2-1-1. Reel Motor Current Control Adjustment

Test Points: TP6001, TP6002
Adjustment: R6090 (MOTOR CURR)

1. Connect the DVM between TP6001 and TP6001 and TP6002 both on the System Control P.C. Board Unit.

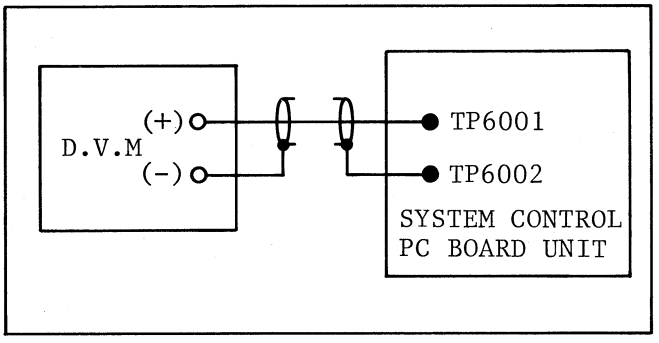

Fig. E2

2. Place the deck to REC.PLAY mode and make sure that the indication of DVM is to meet spec.

SPEC.

MARKING	VOLTAGE(mV)	MARKING	VOLTAGE(mV)
BLACK	190 ∿ 200	BLUE	160 ∿ 170
ORANGE	180 ∿ 190	GREEN	150 ∿ 160
RED	170 ∿ 180		

Fig. E3

3. If it is out of spec., then adjust R6090 (MOTOR CURR) for to meet spec.

2-2. Servo Section

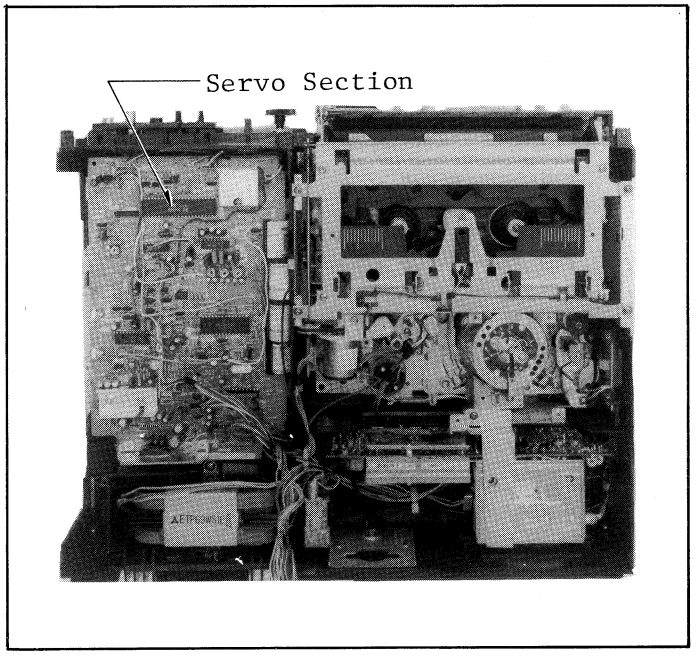

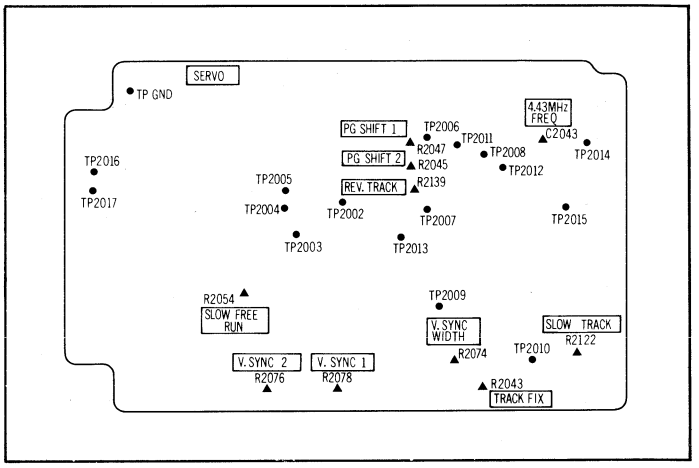

Fig. E4

2-2-1. Fine Slow Free Run Adjustment

Test Points: TP2009, TP2013
Adjustment: R2054 (SLOW FREE RUN)

1. Place the deck to REC.PLAY mode and connect the jumper between TP2013 and GND both on the Servo PC Board Unit.
2. Connect the frequency counter to TP2009 on the same board.
3. Adjust R2054 (SLOW FREE RUN) on the same board so that the indication of frequency counter becomes 1286 ± 20 Hz.

2-2-2. Reference Oscillator Frequency Adjustment

Test Point: TP2001
Adjustment: C2043 (4.43M FREQ)

1. Do not supply any video signal to the VIDEO INPUT on the front panel.
2. Connect the frequency counter to TP2001 on the Servo PC Board Unit.
3. Adjust C2043 (4.43M FREQ) on the same board so that the indication of frequency counter becomes 4.433619 MHz ± 10Hz.

2-2-3. PG Shifter Adjustment

Test Points: TP2011, TP3012
Adjustments: R2045 (PG SHIFT 2)
R2047 (PG SHIFT 1)

1. Connect the oscilloscope CH1 to TP2011 on the Servo P.C. Board Unit and CH2 to TP3012 on the Luminance Section.
2. Set the oscilloscope to CHOP mode and use TP2011 to trigger the scope.
3. Playback the alignment tape (VFM8100H3D) and expand the V-sync portion on the oscilloscope.
4. Adjust R2047 (PG SHIFT 1) on the Servo P.C. Board Unit so that the falling edge of Head Switching Pulse becomes 6H ± 0.5 before from V-sync portion.

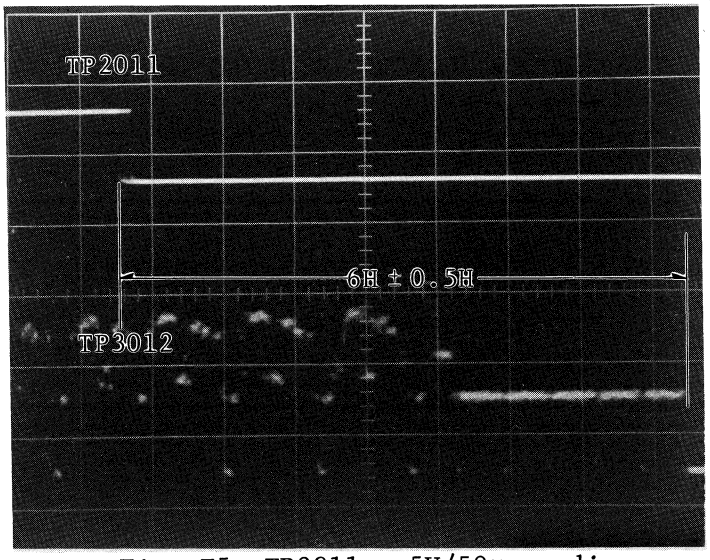

Fig. E5 TP2011 5V/50μsec.div.
TP2012 0.5V/50μsec.div.

5. Switch the slope selector on the scope to either (+) or (-) and adjust R2045 (PG SHIFT 2) on the same board so that the difference between rising edge and falling edge bocomes less than 10 sec.

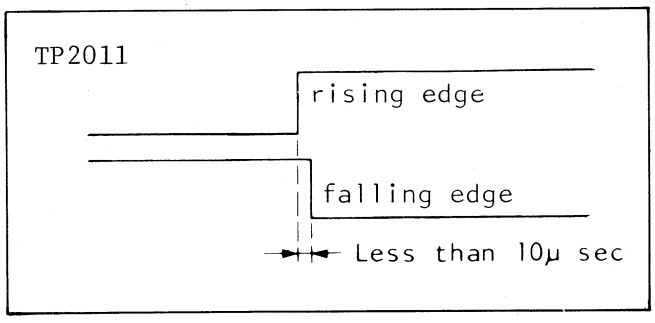

Fig. E6 Switching Edge Difference

2-2-4. Tracking Fix Adjustment

Test Points: TP2011, TP2012
Adjustment: R2043 (NOR PLAY TRACKING)

1. Set the TRACKING VR on the front panel to center detent position.
2. Supply colour bar signal to the VIDEO INPUT on the same panel and make a recording for a few minutes.
3. Connect the oscilloscope CH1 to TP2011 and CH2 to TP2012 both on the Servo P.C. Board Unit.
4. Playback the just recorded portions, and adjust R2043 (NOR PLAY TRACKING) on the same section so that the "T" portion becomes 0.4 ± 0.4msec.

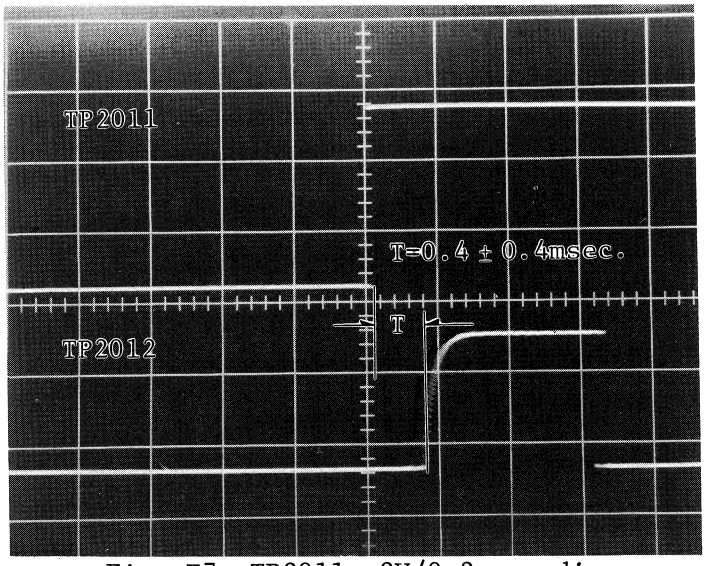

Fig. E7 TP2011 2V/0.2msec.div.
TP2012 2V/0.2msec.div.

2-2-5. Slow Tracking Fix Adjustment

Test Point: Monitor TV
Adjustment: R2122 (SLOW TRACKING)

1. Supply colour bar signal to the VIDEO INPUT on the front panel and make a recording for a few minutes.
2. Playback the just recorded portions and place the deck to SLOW mode.
3. Set the SLOW TRACKING VR to center detent position and SLOW SPEED VR moves fully right side, both on the front panel.
4. Adjust R2122 (SLOW TRACKING) on the Servo P.C. Board Unit so that the noise band is minimum on the TV screen.

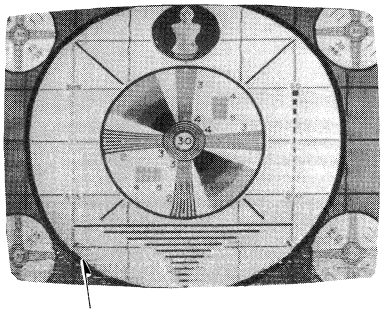

Fig. E8 Noise Band on the TV Monitor

5. Confirm that the noise band is minimum on the TV screen when SLOW SPEED VR moves between left side and right side.

2-2-6. Reverse Play Tracking Fix Adjustment

Test Point: Monitor TV
Adjustment: R2139 (R. PLAY TRACKING)

1. Supply colour bar signal to the VIDEO INPUT on the front panel.
2. Set the TRACKING VR on the same panel to center detent position.
3. Insert the cassette tape and make a recording for a few minutes.
4. Playback the just recorded portions and place the deck to REV.PLAY mode.
5. Adjust R2139 (R. PLAY TRACKING) on the Servo PC Board Unit so that the noise band is disappeared on the TV screen.

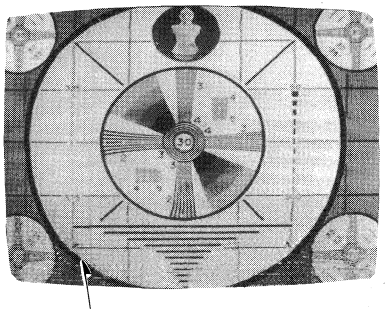

Fig. E9 Noise Band on the TV Monitor

2-2-7. Artificial V-Sync Pulse Width Adjustment

Test Points: TP2010, TP2011
Adjustment: R2074 (V SYNC WIDTH)

1. Playback the alignment tape VFM8100H3D and place the deck to PLAY/STILL mode.
2. Connect the oscilloscope CH1 to TP2011 and CH2 to TP2010 both on the Servo P.C. Board Unit.

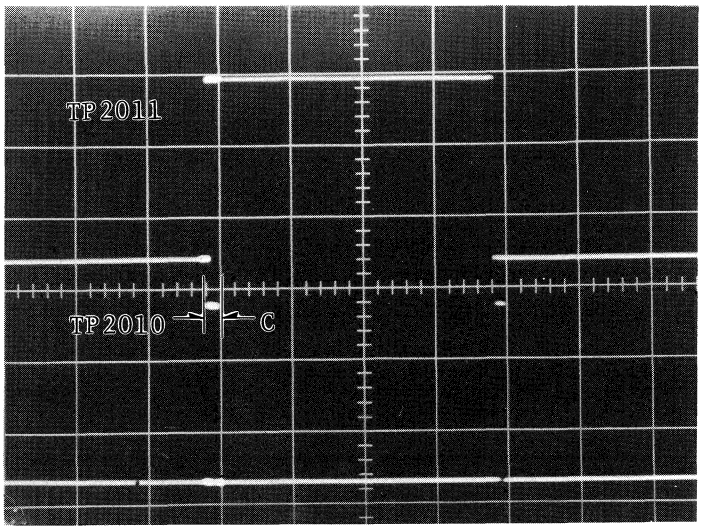

Fig. E10-(a) TP2011 2V/5msec.div.
TP2010 2V/5msec.div.

3. Set the scope to the Delay mode and expand the "C" portion.
4. Adjust R2074 (V SYNC WIDTH) on the same board so that the pulse width "C" becomes 420 ± 20μsec.

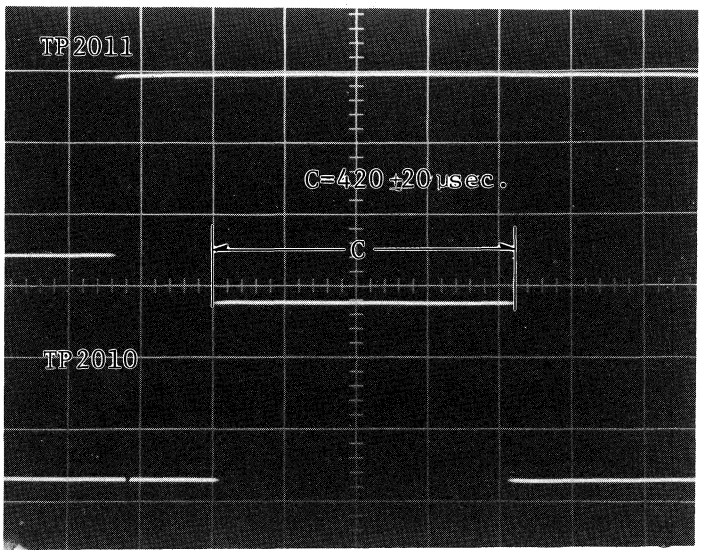

Fig. E10-(b) TP2011 2V/0.1msec.div.
TP2010 2V/0.1msec.div.

2-2-8. Artificial V-Sync Pulse Position Adjustment (CUR/REV Mode)

Test Points: TP2010, TP2011
Adjustment: R2078 (V SYNC 1)

1. Playback the alignment tape VFM8100H3D and place the deck to CUE or REV mode.
2. Connect the oscilloscope CH1 to TP2011 and CH2 to TP2010 both on the Servo P.C. Board Unit

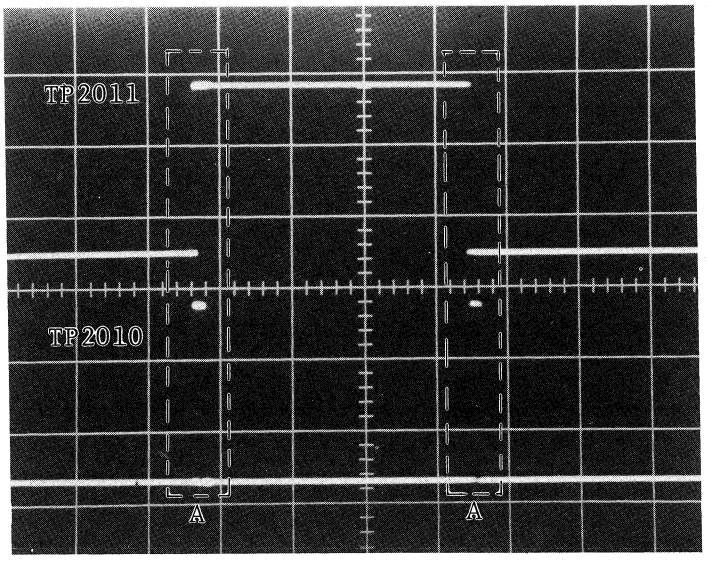

Fig. E11-(a) TP2011 2V/5msec.div.
TP2010 2V/5msec.div.

3. Set the scope to the Delay mode and expand the "A" portion.
4. Adjust R2078 (V SYNC 1) on the same board so that the pulse position "A" becomes 144 ± 25μsec.

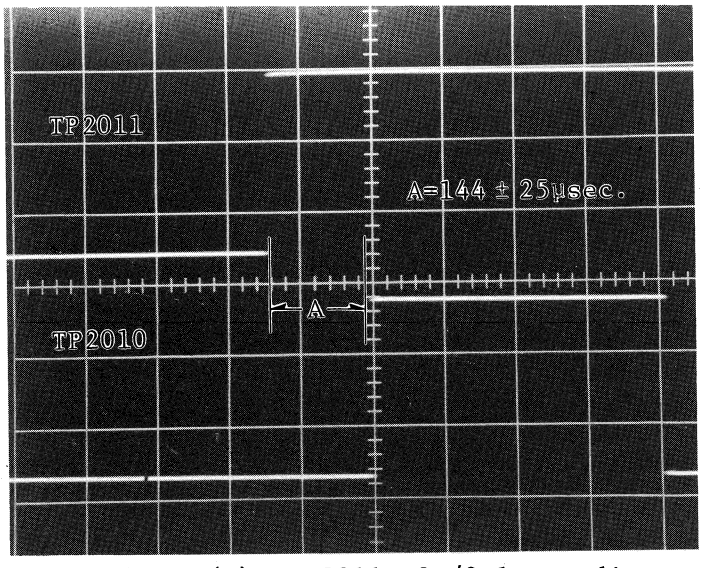

Fig. E11-(b) TP2011 2V/0.1msec.div.
TP2010 2V/0.1msec.div.

2-2-9. Artificial V-Sync Pulse Position Adjustment (PLAY/STILL Mode)

Test Points: TP2010, TP2011
Adjustment: R2076 (V SYNC 2)

1. Playback the alignment tape VFM8100H3D and place the deck to PLAY/STILL mode.
2. Connect the oscilloscope CH1 to TP2011 and CH2 to TP2010 both on the Servo P.C. Board Unit.

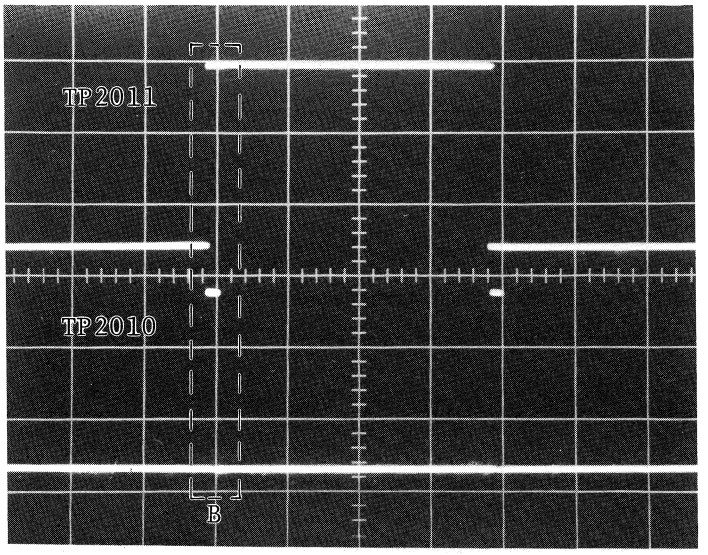

Fig. E12-(a) TP2011 2V/5msec.div.
TP2010 2V/5msec.div.

3. Set the scope to the Delay mode and expand the "B" portion.
4. Adjust R2076 (V SYNC 2) on the same board so that the pulse position "B" becomes 275 ± 25μsec.

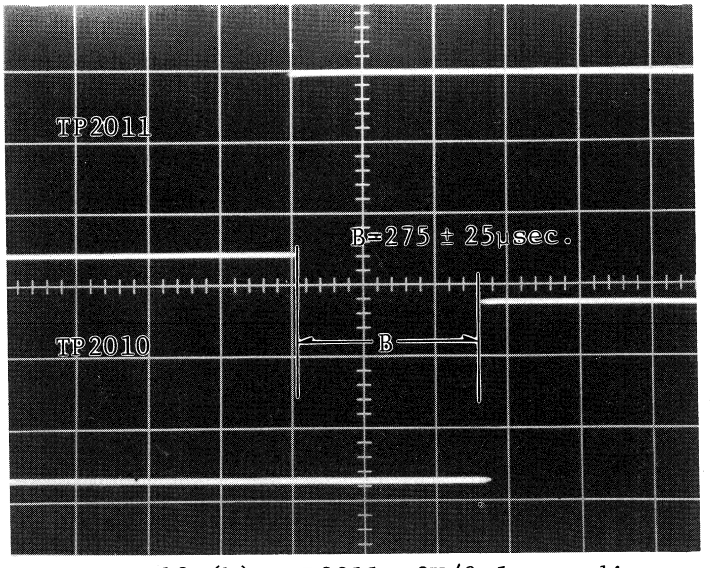

Fig. E12-(b) TP2011 2V/0.1msec.div.
TP2010 2V/0.1msec.div.

2-3. Luminance & Chrominance Section

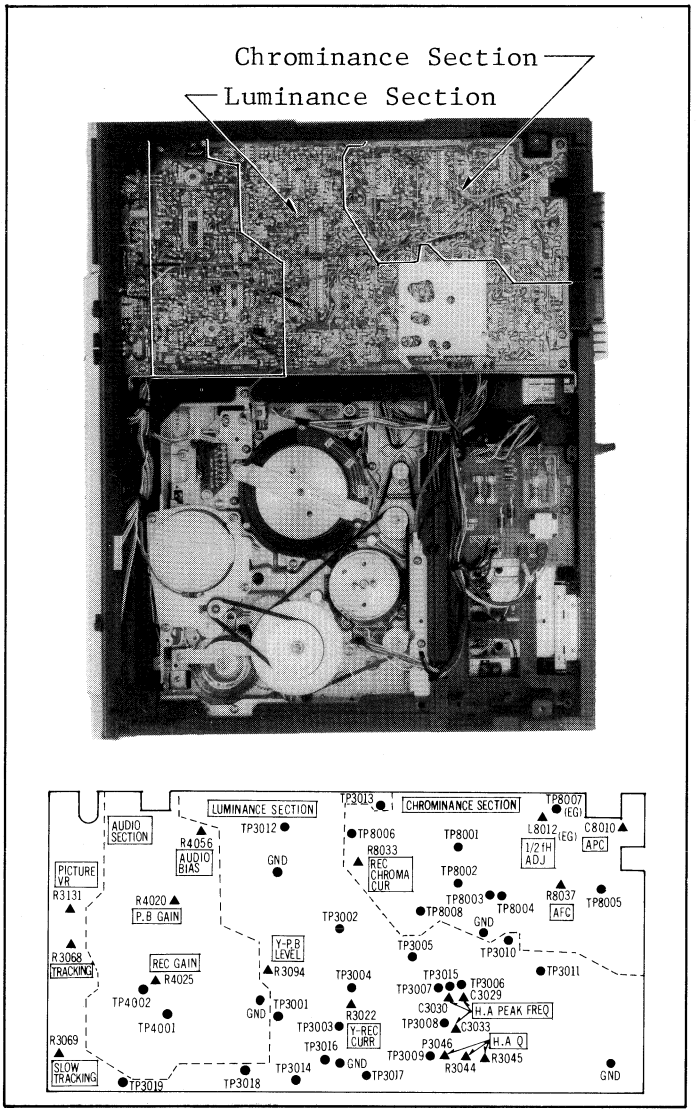

Fig. E13 Luminance & Chrominance Section

2-3-1. AFC Frequency Adjustment

Test Point: TP8005
Adjustment: R8037 (AFC)

1. Disconnect the connector to the VIDEO INPUT on the front panel.
2. Connect the frequency counter to TP8005 on the Chrominance section.
3. Adjust R8037 (AFC) on the same section so that the indication of frequency counter becomes 15.625kHz ± 50Hz.
4. Supply colour bar signal to the VIDEO INPUT and confirm that the indication of frequency counter is 15.625kHz + 1Hz.

2-3-2. APC Frequency Adjustment

Test Point: TP8002
Adjustment: C8010 (APC)

1. Disconnect the connector to the VIDEO INPUT on the front panel.
2. Place the deck to REC.PLAY mode.
3. Connect the 2 jumper wires as follows (on the Chrominance Section, respectively).

   TP8003 ∿ GND
   TP8004 ∿ GND

4. Connect the frequency counter to TP8002 on the same section and adjust C8010 (APC) on the same section so that the indication of frequency counter becomes 4.433619MHz ± 50Hz.

2-3-3. Recording Current Adjustment

Test Points: TP3015, TP3007
Adjustments: R3022 (REC FM)
R8033 (REC CHROMA)

1. Supply colour bar signal to the VIDEO INPUT on the front panel.
2. Connect the oscilloscope between TP3015 (HOT) and TP3007 (GND) both on the Luminance section.
3. Place the deck to REC.PLAY mode and connect the jumper between TP3004 and GND both on the same section.
4. Adjust R8033 (REC CHROMA) on the Chrominance Section so that the amplitude becomes 28 ± 2mVp-p.

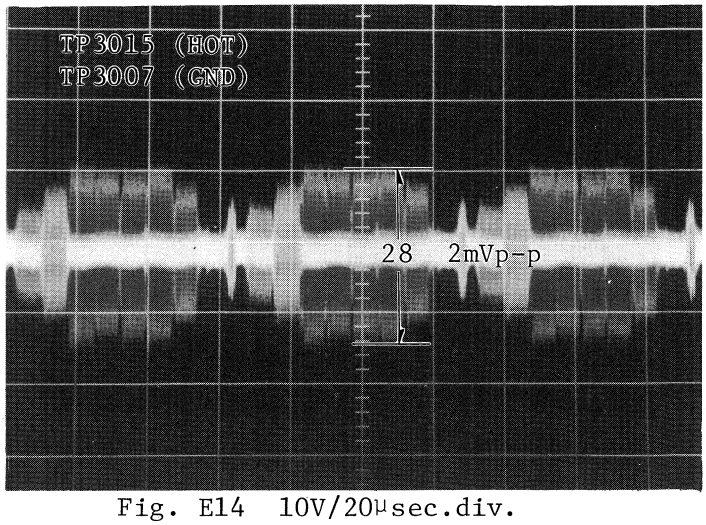

Fig. E14 10V/20μsec.div.

5. Remove the jumper wire and adjust R3022 (REC FM) on the Luminance Section so that the V-sync Tip portion of waveform becomes 150 ± 5mVp-p.

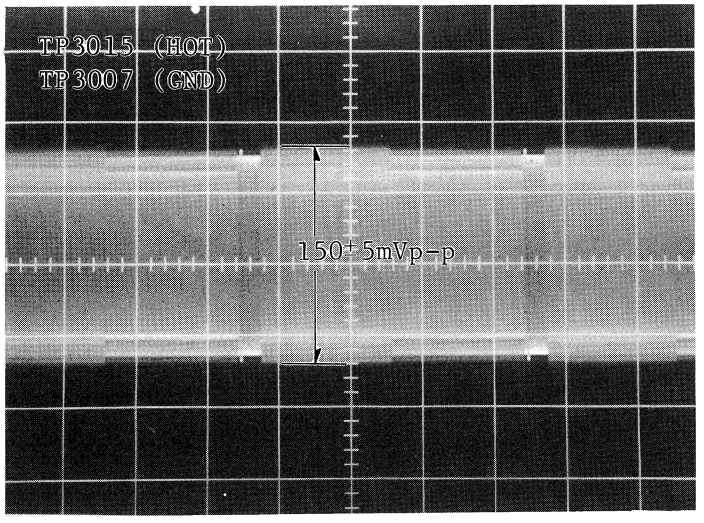

Fig. E15 50mV/5msec.div.

2-3-4. Head Amp Peak Frequency Adjustment

Test Point: TP3010
Adjustments: R3044 (Q-R), C3029 (PEAK-L')
R3045 (Q-L'), C3030 (PEAK-R)
R3046 (Q-L), C3033 (PEAK-L)

1. Set the sweep generator output to 200mVp-p at no load and insert the attenuator -3dB.
2. Put the marker to the sweep generator output at 2MHz and 4.9MHz.

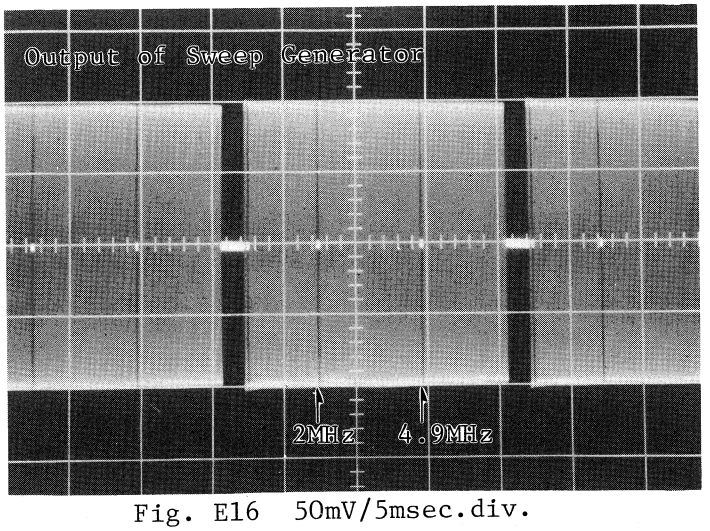

Fig. E16 50mV/5msec.div.

3. Connect the SYNC OUT on the Sweep Generator to the VIDEO INPUT on the front panel of the deck.

4. Supply sweep generator output to the TP3006 and TP3008 both on the Luminance Section through the resistor as shown below.

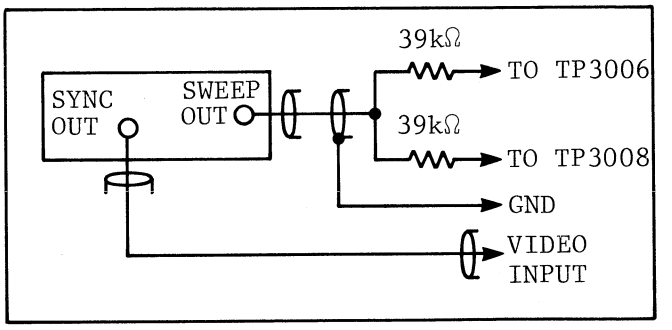

Fig. E17

5. Insert the blank tape and place the deck to PLAY mode. (blank tape: This tape must be not recorded any video signal.)
6. Connect the oscilloscopt to TP3010 on the Luminance Section.
7. Adjust R3044 (Q-R) and R3046 (Q-L) both on the same section so that the envelopes of both R CH and L CH becomes as shown below.

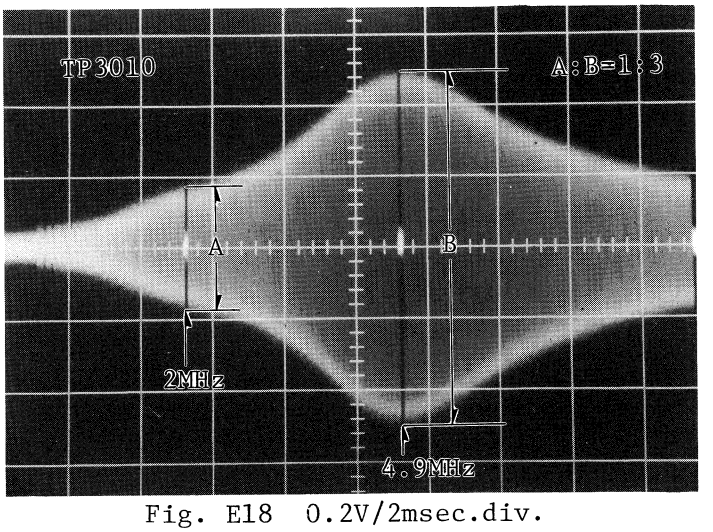

Fig. E18 0.2V/2msec.div.

8. Adjust C3030 (PEAK-R) and C3033 (PEAK-L) both on the same section so that the peak of both channels becomes 4.9MHz portions.

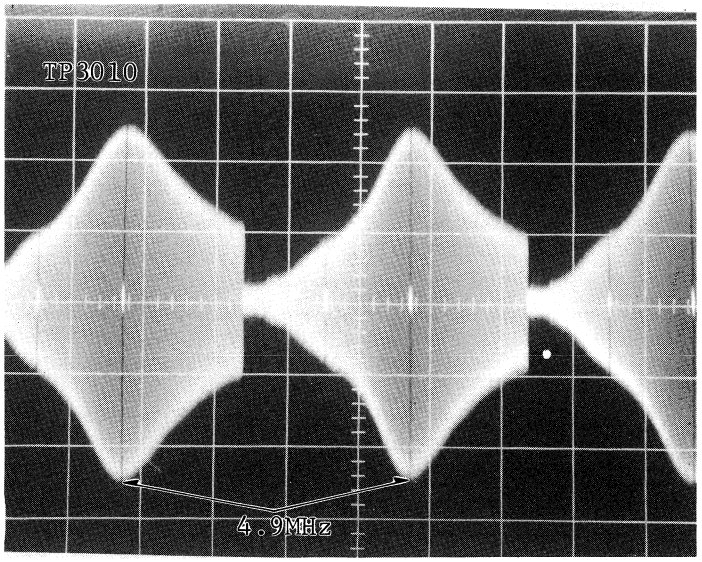

Fig. E19 0.2V/5msec.div.

9. Next, place the deck in PLAY/STILL mode.
10. Adjust R3045 (Q-L') on the same section so that the envelope becomes as shown below.

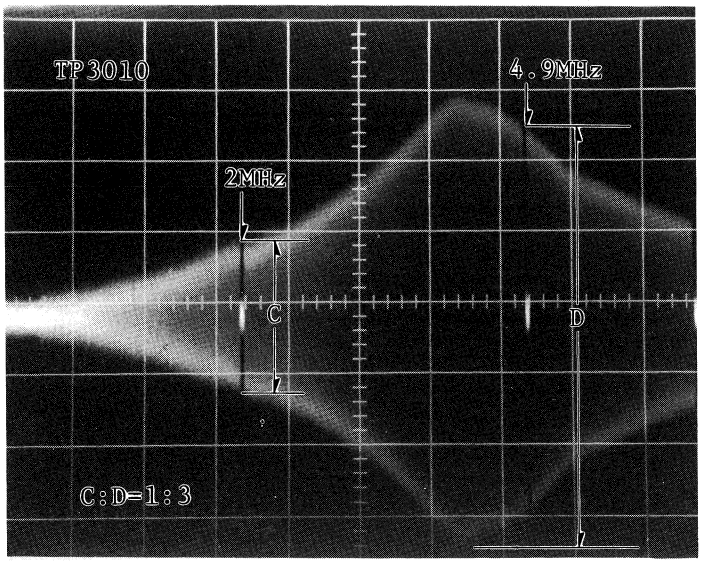

Fig. E20 0.2V/2msec.div.

11. Adjust C3029 (PEAK-R) on the same section so that the peak of waveform becomes 4.9MHz portion.

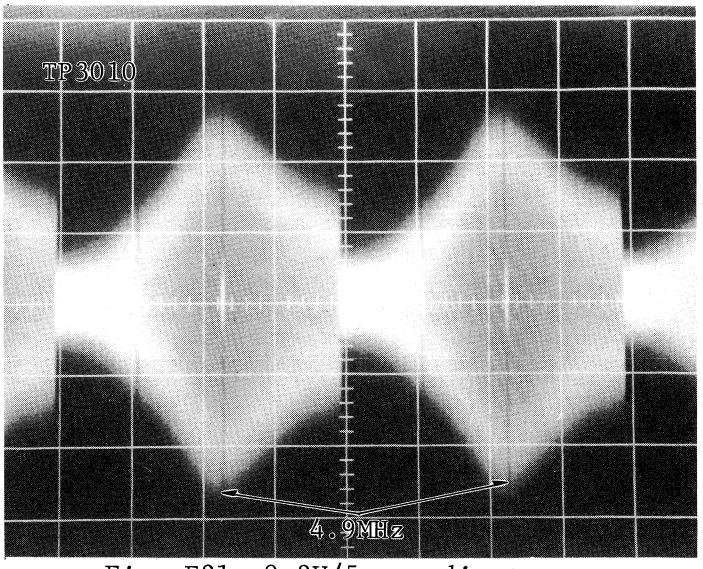

Fig. E21 0.2V/5msec.div.

2-3-5. Head Amp Frequency Response Adjustment

Test Point: TP3012
Adjustments: R3044 (Q-R)
R3045 (Q-L')
R3046 (Q-L)

1. Set the sweep generator output as shown below.
(Amplitude value of this waveform is terminated with 75Ω)

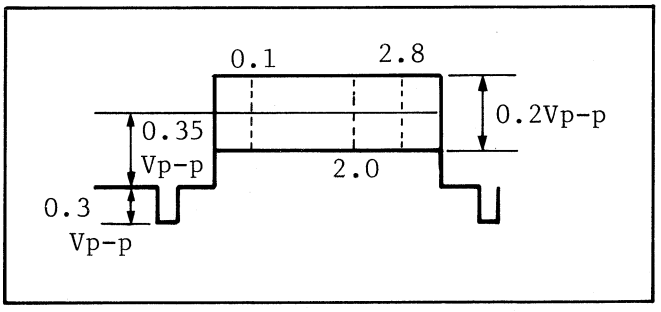

Fig. E22-(a)

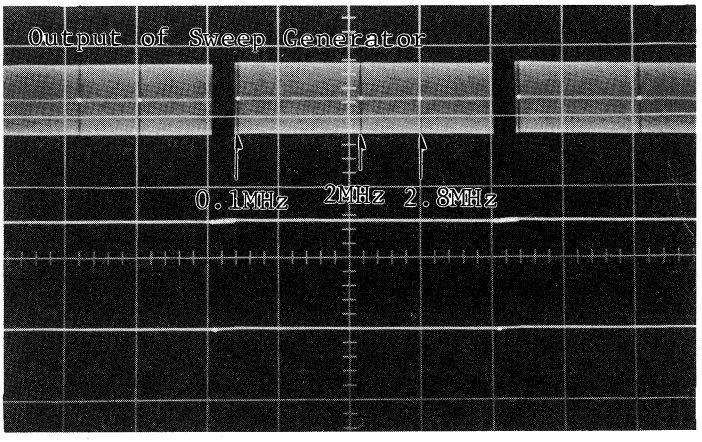

Fig. E22-(b) 0.2V/5msec.div.

2. Supply above signal to the VIDEO INPUT on the front panel and make a recording for a few minutes.
3. Connect the oscilloscope to TP3012 on the Luminance Section and Playback the just recorded portions.
4. Adjust R3044 (Q-R) and R3046 (Q-L) both on the same section so that the waveform of both R CH and L CH becomes as shown below.

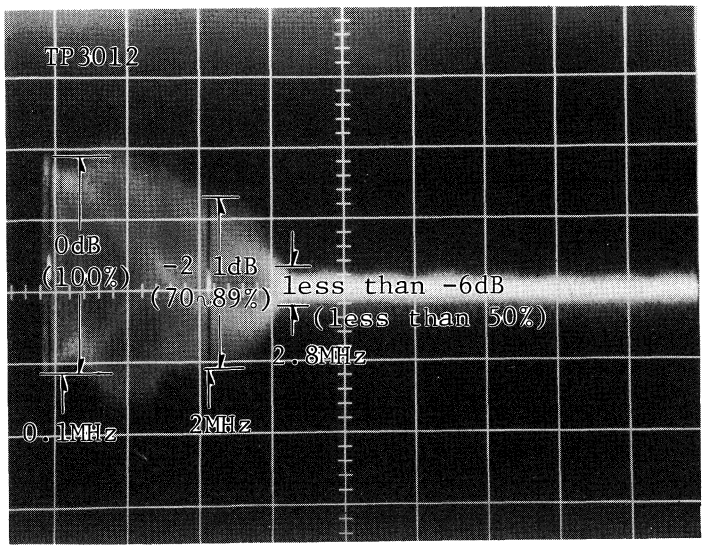

Fig. E23 0.1V/5msec.div.

5. Make sure that the 2.8MHz portions are less than -6dB.
6. Next, place the deck to PLAY/STILL mode.
7. Adjust R3045 (Q-L') on the same section so that the waveform becomes as shown below.

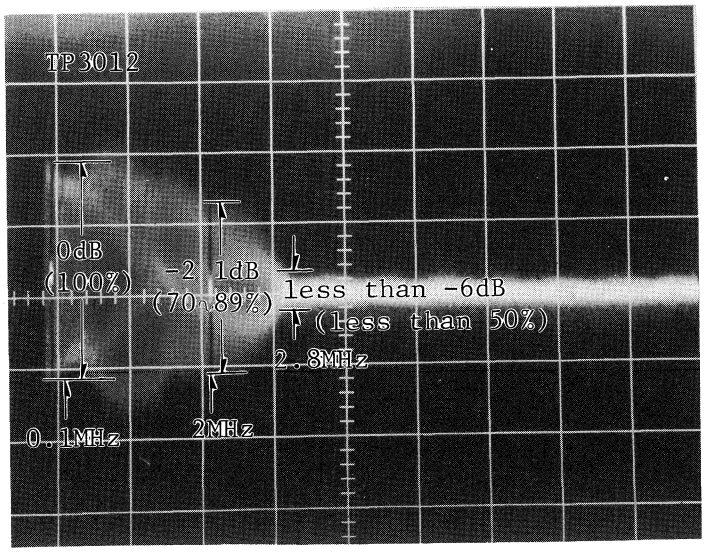

Fig. E24 0.1V/5msec.div.

8. Make sure that the 2.8MHz portion is less than -6dB.

2-3-6. Playback Level Adjustment

Test Point: TP3012
Adjustment: R3094 (PB LEVEL)

1. Supply colour bar signal to the VIDEO INPUT on the front panel.
2. Insert a cassette tape and make a recording for a few minutes.
3. Connect the oscilloscope to TP3012 on the Luminance Section.
4. Playback the just recorded portions and adjust R3094 (PB LEVEL) on the same section so that the video level becomes 2.0 ± 0.1Vp-p.

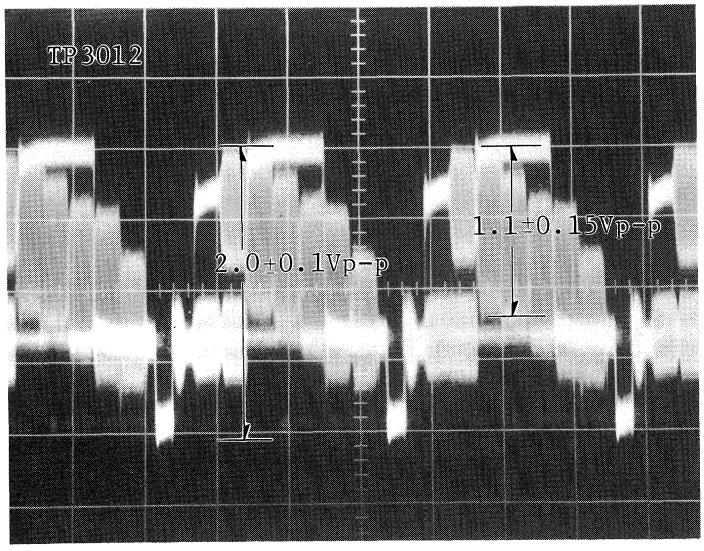

Fig. E25 0.5V/20μsec.div.

5. Confirm that the cyan level is 1.1 ± 0.15Vp-p.

2-3-7. SECAM Killer Adjustment

Test Point: TP8007
Adjustment: L8012 (SECAM KILL)

1. Supply SECAM colour bar signal to the VIDEO INPUT on the front panel.
2. Place the deck to REC.PLAY mode and connect the oscilloscope to TP8007 on the Chrominance Section.
3. Adjust L8012 (SECAM KILL) on the same section so that the peak of waveform becomes "A" point.

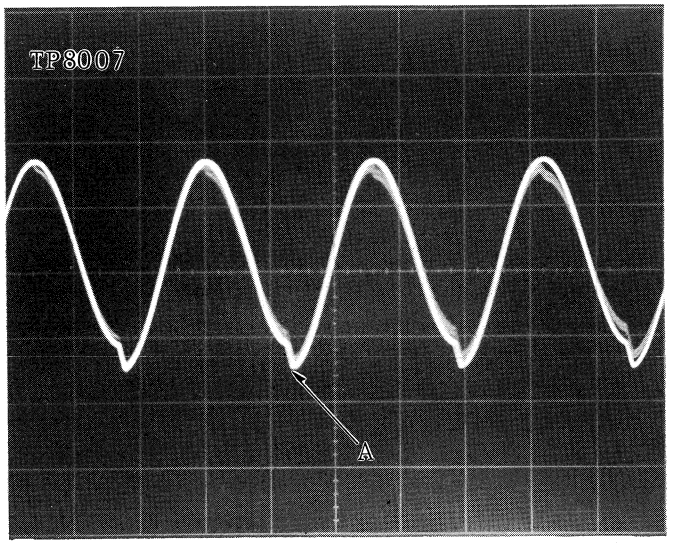

Fig. E26 2V/50μsec.div.

2-4. Audio Section

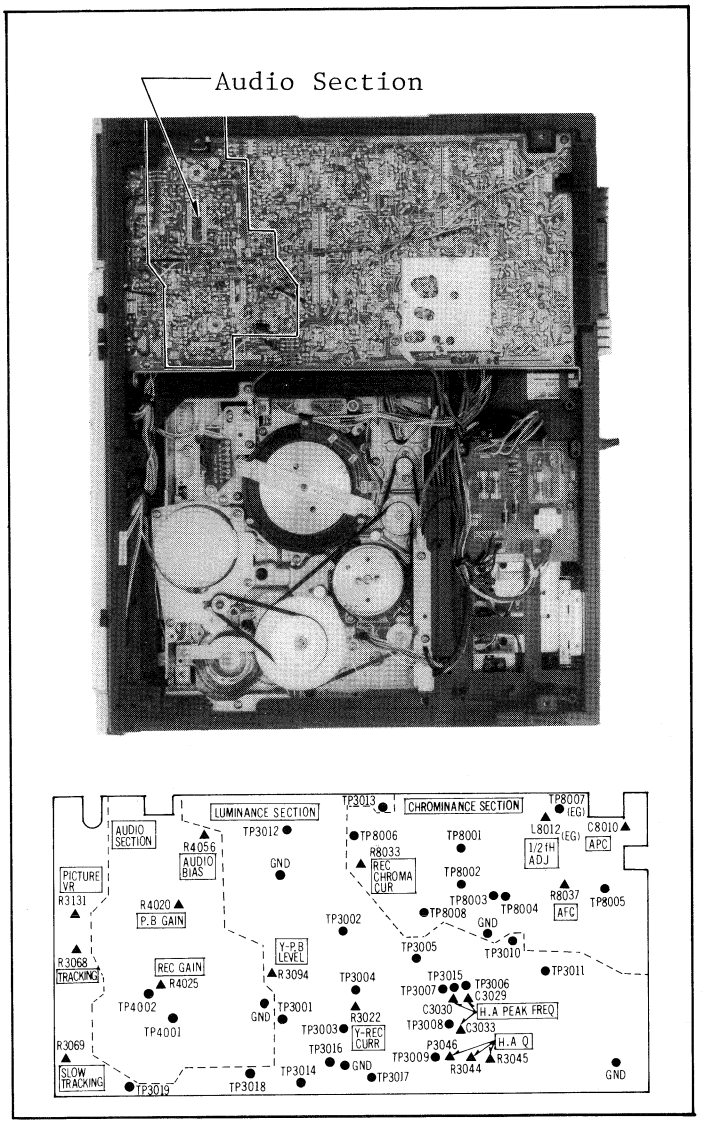

Fig. E27 Audio Section

2-4-1. Audio Bias Current Adjustment

Test Point: Audio Head 2P Connector
Adjustment: R4056 (AUDIO BIAS)

1. Do not supply any audio signal to the AUDIO INPUT on the front panel.
2. Place the deck to REC.PLAY mode and connect the DVM between Audio Head 2 Pin Connector on the A/C Head P.C. Board.

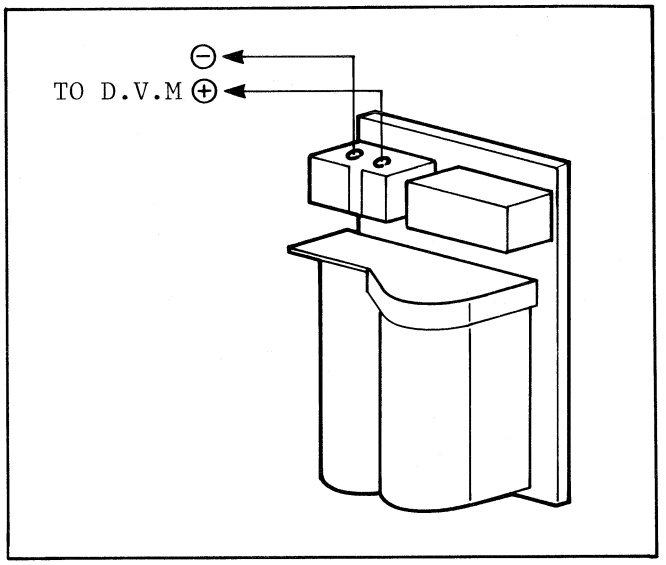

Fig. E28 A/C Head

3. Adjust R4056 (AUDIO BIAS) on the Audio Section so that the indication of DVM becomes 4.1 ± 0.1mVrms.
4. Place the deck to AUDIO-DUB mode and make sure that the indication of DVM is 4.1 +0.4, -0.1mVrms.

2-4-2. Audio Playback Gain Adjustment

Test Point: TP4001
Adjustment: R4020 (PB GAIN)

Note:
When this adjustment is doing, Tape Interchangeability Adjustment is complete.

1. Playback the alignment tape VFM8100H3D and connect the oscilloscope to TP4001 on the Audio Section.
2. Turn the NR switch to off.

3. Adjust R4020 (PB GAIN) on the same section so that the 6kHz signal becomes 320 ± 20mVp-p.

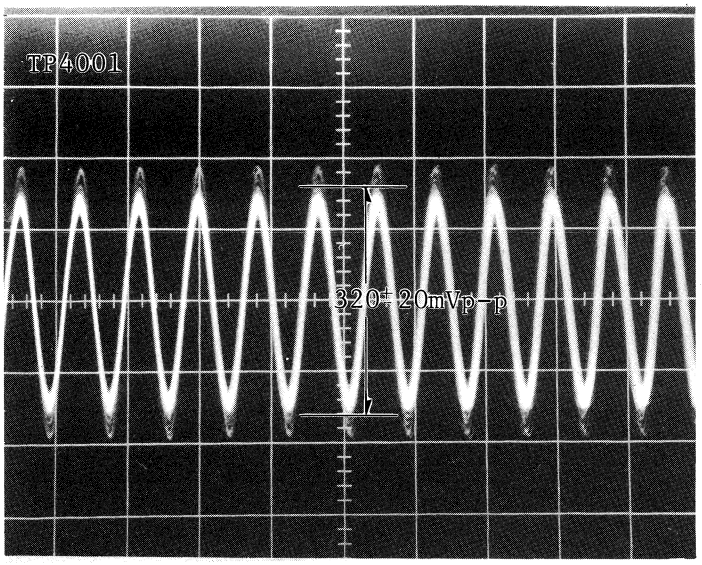

Fig. E29 0.1V/0.2msec.div.

2-4-3. Audio Recording Gain Adjustment

Test Point: TP4001
Adjustment: R4025 (REC GAIN)

Note:
When this adjustment is doing, Audio Playback Gain Adjustment is complete.

Specification: Playback Level = Recording Level $^{+56}_{-50}$mVrms.

1. Turn the NR switch to off.
2. Supply sinewave signal (1kHz, -10dB) to the AUDIO INPUT and colour bar signal to the VIDEO INPUT both on the front panel.
3. Insert a cassette tape and make a recording for a few minutes.
4. Connect the oscilloscope to TP4001 on the Audio Section and memorize the recording level.
5. Playback the just recorded portions, and compared with recording level and playback level.
6. If this difference is out of spec., then turn the R4025 (REC GAIN) on the same section and repeat this adjustment to meet spec.

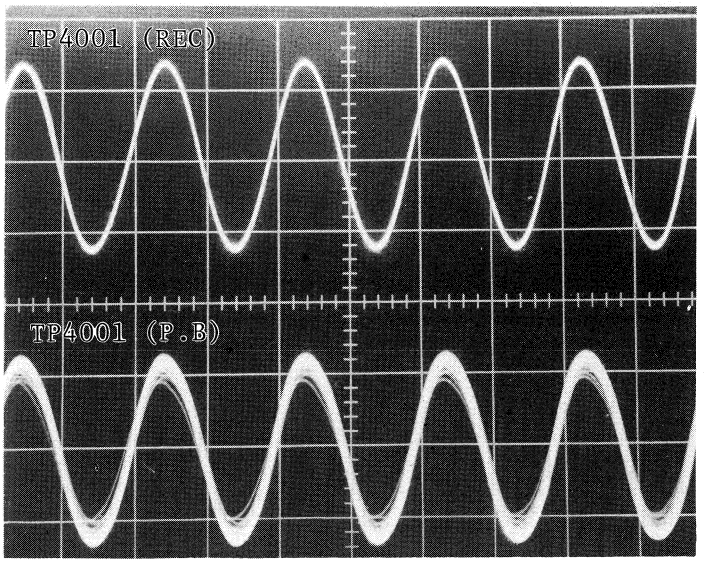

Fig. E30 0.5V/0.5msec.div.

2-5. Programmable Timer Section

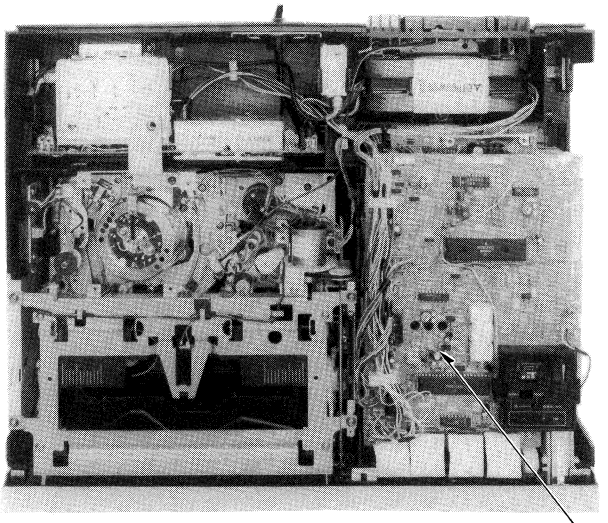

Timer Decoder P.C. Board

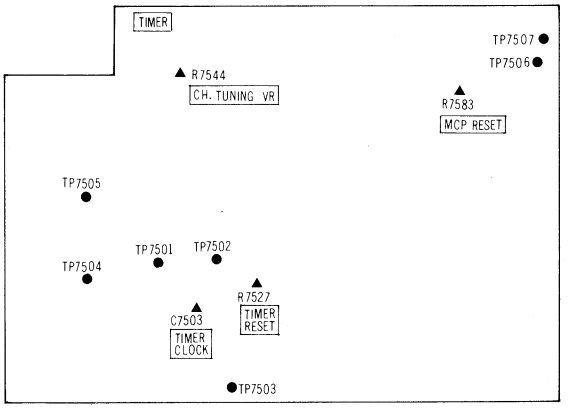

Fig. E31 Timer Section

2-5-1. Timer Clock Adjustment

Test Point: TP7501
Adjustment: C7503 (TIMER CLOCK)

1. Connect the frequency counter to TP7501 on the Programmable Timer PC Board Unit.
2. Adjust C7503 (TIMER CLOCK) on the same board so that the indication of frequency counter becomes 128 ± 0.1 Hz.

2-5-2. Timer Microprocessor Reset Voltage Adjustment

Test Point: IC7505-12
Adjustment: R7583 (MCP RESET)

1. Connect the oscilloscope to pin 12 of IC7505 on the Programmable Timer P.C. Board Unit.
2. Turn R7583 (MCP RESET) on the same board fully counter clockwise and adjust same resistor so that the output of pin 12 is "Low" to "High" transition.

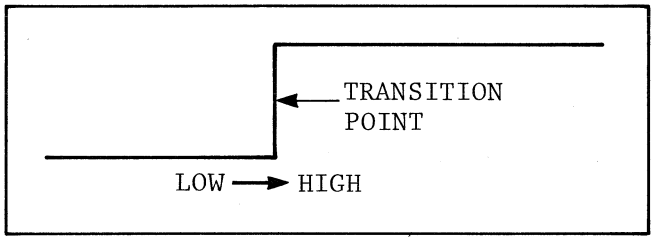

Fig. E32

2-5-3. Timer Reset Voltage Adjustment

Test Point: IC7501-22
Adjustment: R7527 (TIMER RESET)

1. Connect the oscilloscope to pin 22 of IC7501 on the Programmable Timer P.C. Board Unit.
2. Turn R7527 (TIMER RESET) on the same board fully counter clockwise and adjust same resistor so that the output of pin 22 is "Low" to "High" transition.

2-6. Infrared Receiver Section

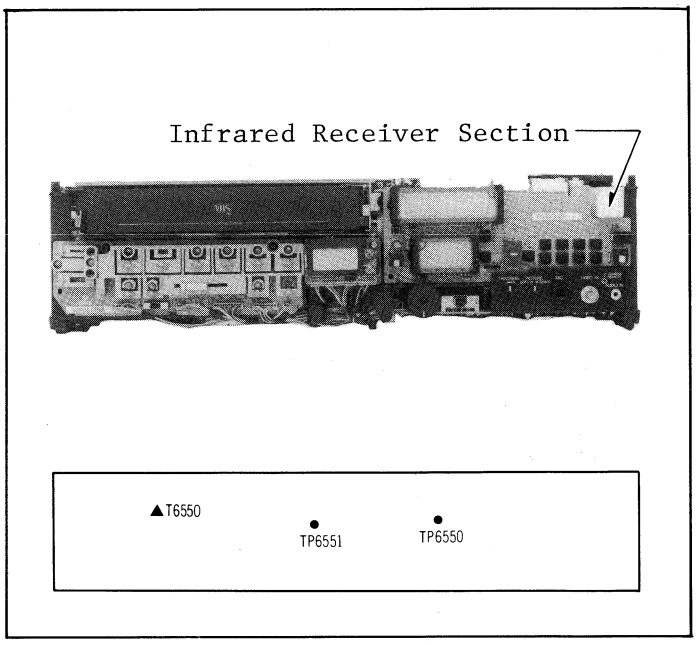

Fig. E33 Infrared Receiver Section

2-6-1. Infrared Tuning Frequency Adjustment

Test Point: TP6551
Adjustment: T6550

1. Place the deck in Stop mode.
2. Connect the oscilloscope to TP6551 on the Infrared Receiver P.C. Board Unit.
3. Adjust T6550 on the same section so that the output level at TP6551 becomes maximum while STOP Key of the Infrared Remote Control Unit is being pressed.

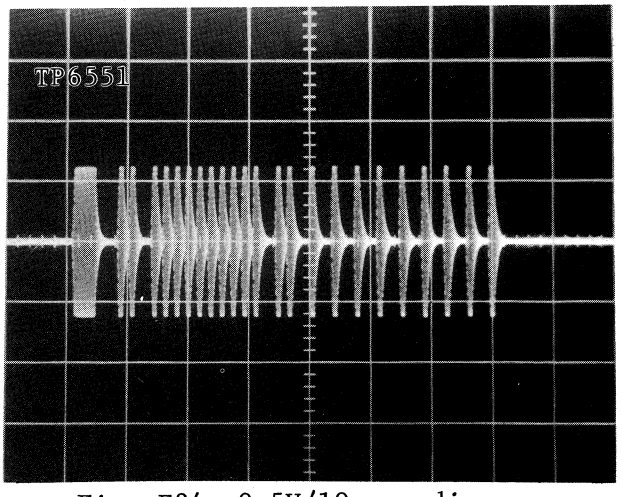

Fig. E34 0.5V/10msec.div.

2-7. TV DEMODULATOR SECTION

Model No: NV-777E/EG

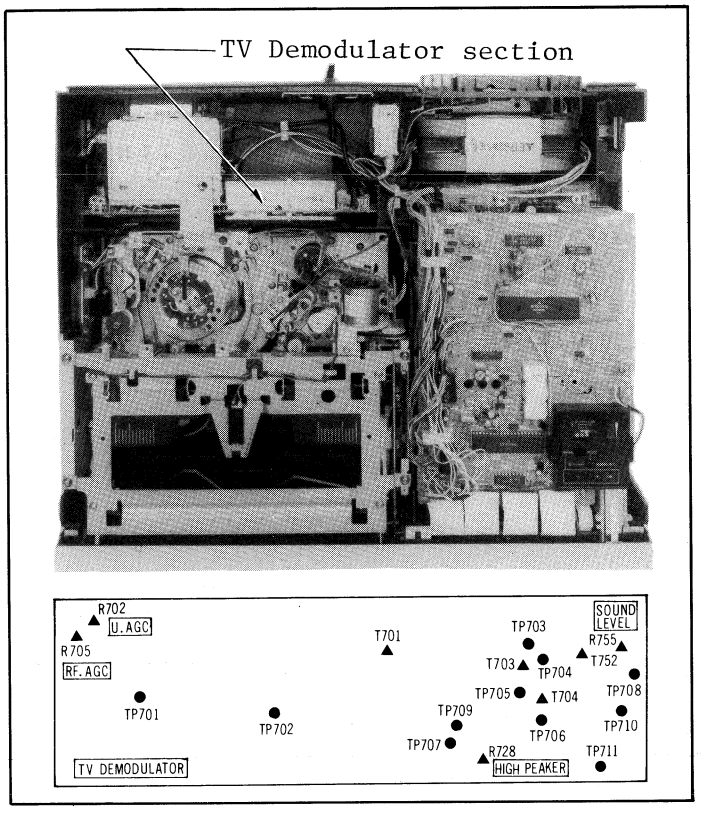

Fig. E35

This section provides complete electrical adjustment procedures which may be required for TV demodulator circuit.

Test Equipment

To make adjustments completely, following equipments are required.

1. VIF Sweep Generator with the Trap Adjustor 38.9MHz
2. SIF Sweep Generator ..... 5.5MHz ± 150kHz
3. CW Oscillator ..... 38.9MHz ± 100kHz
4. Digital Volt Meter
5. Oscilloscope
6. DC Power Supply
7. Monitor Scope

2-7-1. VIF Sweep Adjustment

1. Connect the H-Out of the VIF Sweep Generator to the H-In of the monitor scope.
2. Connect the Marker-Out of the VIF Sweep Generator to the Marker-In or Z-Terminal of the monitor scope.
3. Set the Channel Selector to the VHF High position (VH) and turn the tuning volume so that the voltage at BT terminal of the Tuner becomes 15 ± 1V DC.
4. Connect the jumper wire between TP701 (RF AGC) and ground.
5. Connect the 100Ω resistor between TP704 and TP705.
6. Connect the monitor scope to TP707.
7. Supply the output of the VIF Sweep Generator to Test Point of the Tuner.

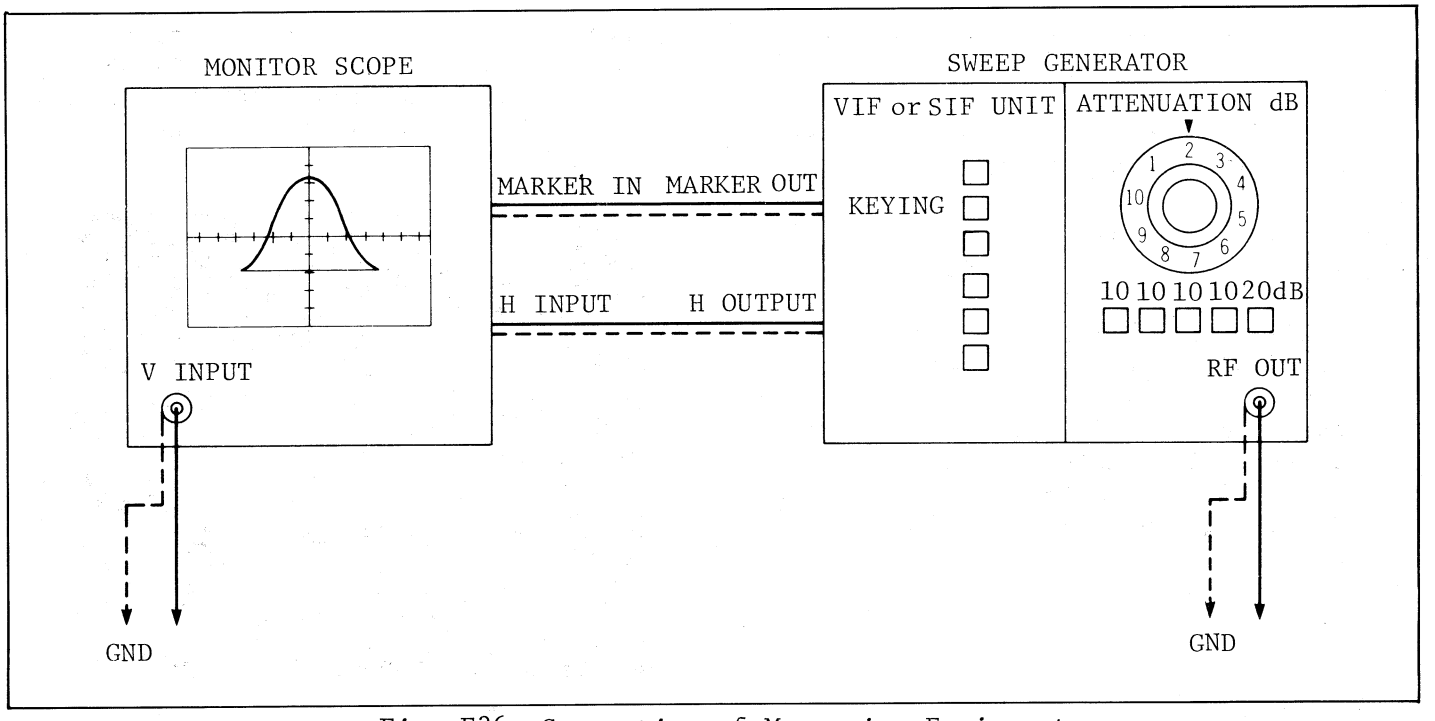

Fig. E36 Connection of Measuring Equipment

8. Adjust the output of the VIF Sweep Generator so that the level of VIF waveform becomes 1.0Vp-p.
9. Release 20dB from the attenuator of the Sweep Generator.
10. Set the DC Power Supply at TP709, and supply the Voltage so that the level of VIF waveform becomes 1.0Vp-p.
11. Adjust T702 so that the attenuation of the 33.4MHz trap becomes minimum.
12. Adjust T701 (a) so that the attenuation of the 40.4MHz trap becomes minimum.
13. Adjust the Tuner Converter Coil, IF AMP Coil T700 and HLB Transformer T701 so that the sweep output waveform becomes as follows.

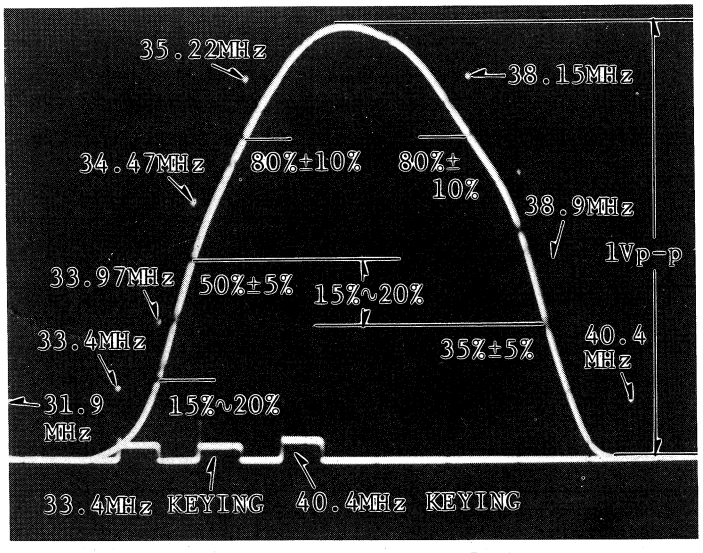

Fig. E37 VIF Waveform

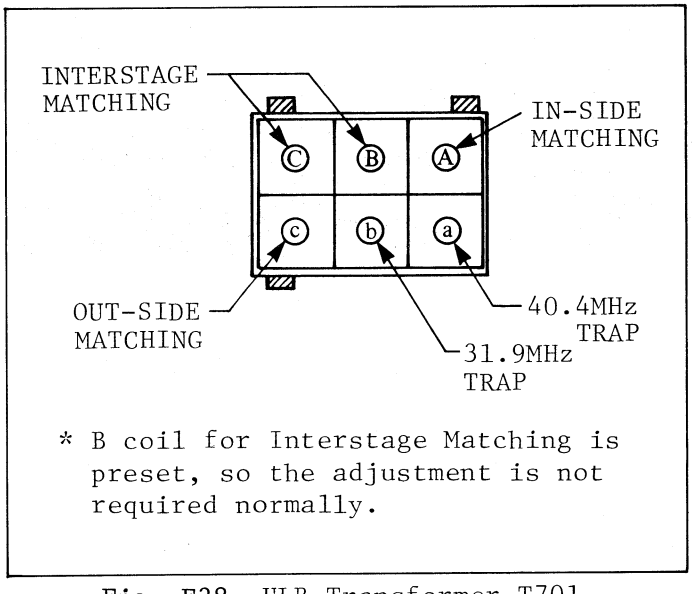

Fig. E38 HLB Transformer T701

2-7-2. Selective Coil Adjustment

1. Connection of measuring equipments is the same as in the VIF Sweep Adjustment.
2. Connect the output of the VIF Sweep Generator to TP703.
3. Connect the monitor scope to TP707.
4. Supply the DC Voltage (6.0 ∿ 6.5V) to TP709 so that the noise level on the sweep waveform becomes minimum.
5. Turn T704 2 turns clockwise or counterclockwise.
6. Adjust the output of the VIF Sweep Generator so that the sweep wave becomes 2Vp-p.
7. Adjust T703 so that the marker position at 38.9MHz is the peak of the wave as shown below.

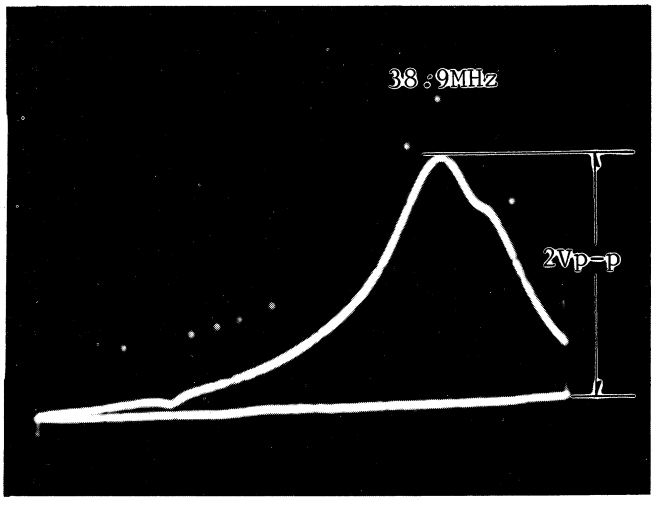

FIG. E39

8. After above adjustment, adjust T704 so that the marker position at 38.9MHz is as shown below.

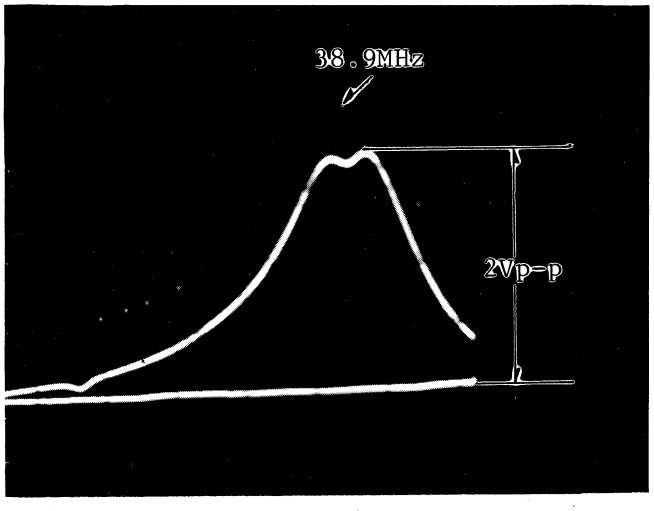

Fig. E40

2-7-3. SIF Sweep Adjustment

1. Connect the H-Out of the SIF Sweep Generator to the H-In of the monitor scope.
2. Connect the Marker-Out of the SIF Sweep Generator to the Marker-In or Z-terminal of the monitor scope.
3. Connect the oscilloscope to the output of the SIF Sweep Generator and set the sweep output to 700mVp-p.
4. Connect the output of the SIF Sweep Generator to TP706.
5. Connect the monitor scope to TP710.
6. Turn R755 fully clockwise.
7. Adjust T752 so that the attenuation of 5.5MHz trap becomes minimum.
8. Adjust T751 for maximum peak-to-peak amplitude of response "S" curve as shown below.

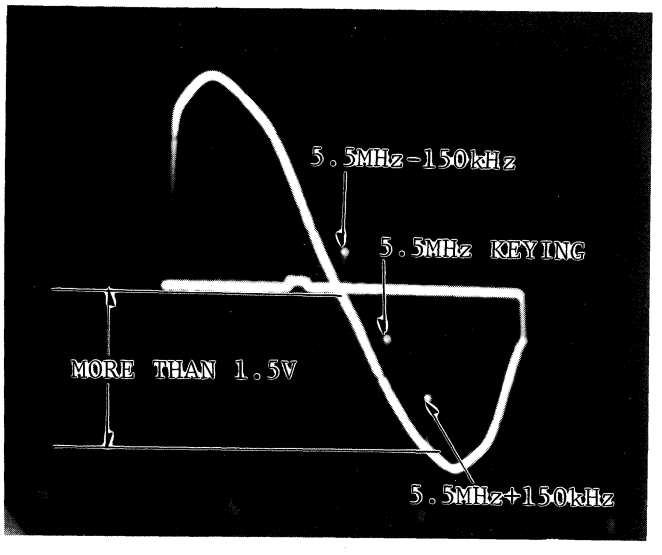

Fig. E41 SIF Waneform

9. Confirm that the level between the 150kHz marker position is more than 1.5Vp-p.

2-7-4. AFC Adjustment

1. Set the CW oscillator so that the 38.9MHz CW signal becomes 1Vp-p.
2. Supply this signal to the Tuner Test Point.
3. Set the channel Selector to the VHF High Position (VH) and turn the tuning volume so that the voltage at BT terminal of the Tuner becomes 15 ± 1V.
4. Connect the Digital Voltmeter to the Tuner AFC terminal TP702.
5. Confirm the reading "A" of the Digital Voltmeter is between 6.4V and 6.8V, when the AFC switch is off.
6. Set the AFC switch is "ON".
7. Adjust T704 so that the level at the Tuner AFC terminal TP702 becomes "A" ± 0.3V.
8. Change the frequency of the CW oscillator ±100kHz, centered at 38.9MHz and confirm that the difference of the AFC voltage is more than ±3V.

2-7-5. Confirmation of Video Level and Adjustment of Burst Level

1. Supply the PAL Standard Colour Bar signal to RF In terminal and tune this signal and set the AFC SW.
2. Connect the oscilloscope to TP711.
3. Confirm that the video level at TP711 is 1.0 ± 0.2Vp-p.
4. Adjust resistor R728 so that the burst level becomes 240 ± 10mVp-p as shown below.

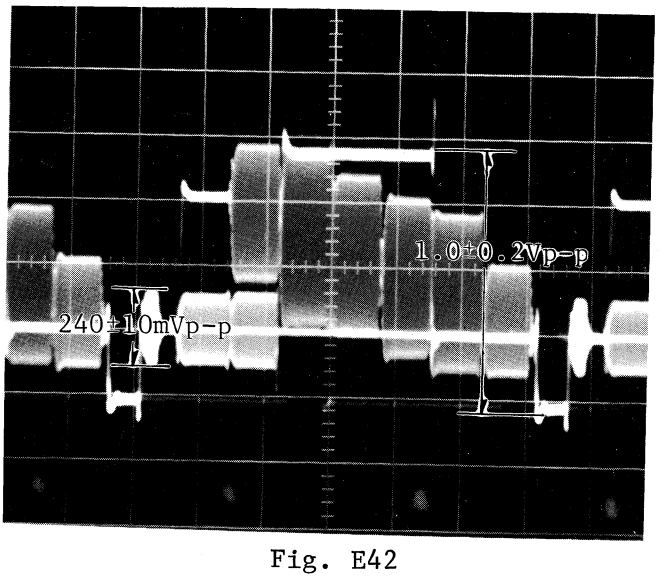

Fig. E42

2-8. TV DEMODULATOR SECTION

Model No: NV-777B

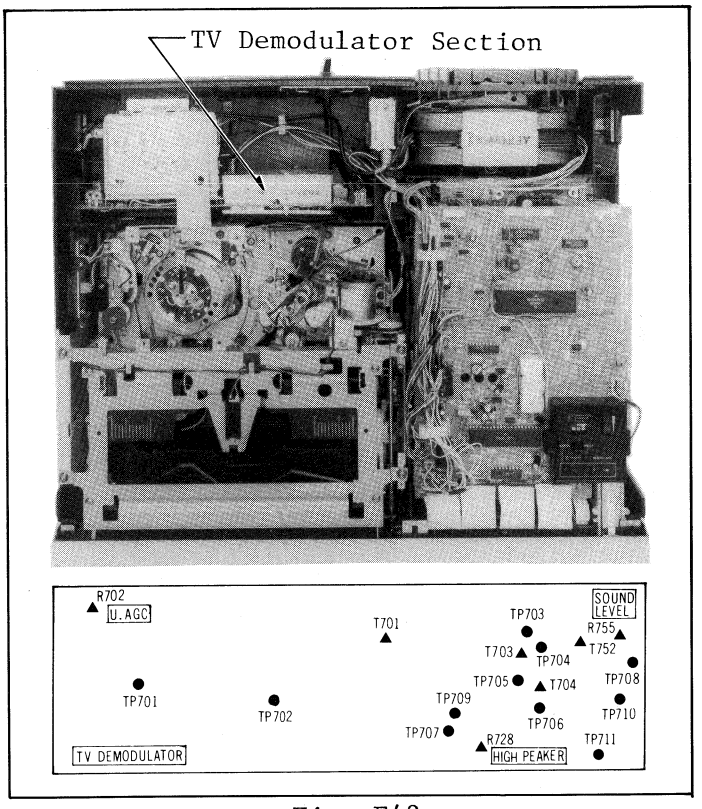

Fig. E43

This section provides complete electrical adjustment procedures which may be required for TV demodulator circuit.

Test Equipment

To make adjustments completely, following equipments are required.

1. VIF Sweep Generator with the Trap Adjustor 39.5MHz
2. SIF Sweep Generator ..... 6.0MHz ± 150kHz
3. CW Oscillator ..... 39.5MHz ± 100kHz
4. Digital Volt Meter
5. Oscilloscope
6. DC Power Supply
7. Monitor Scope

2-8-1. VIF Sweep Adjustment

1. Connect the H-Out of the VIF Sweep Generator to the H-In of the Monitor scope.
2. Connect the Marker-Out of the VIF Sweep Generator to the Marker-In or Z-terminal of the monitor scope.
3. Turn the tuning volume so that the voltage at BT terminal of the Tuner becomes 15 ± 1V DC.
4. Connect the jumper wire between TP701 (RF AGC) and ground.
5. Connect the 100Ω resistor between TP704 and TP705.
6. Connect the monitor scope to TP707.
7. Supply the output of the VIF Sweep Generator to Test Point of the Tuner.

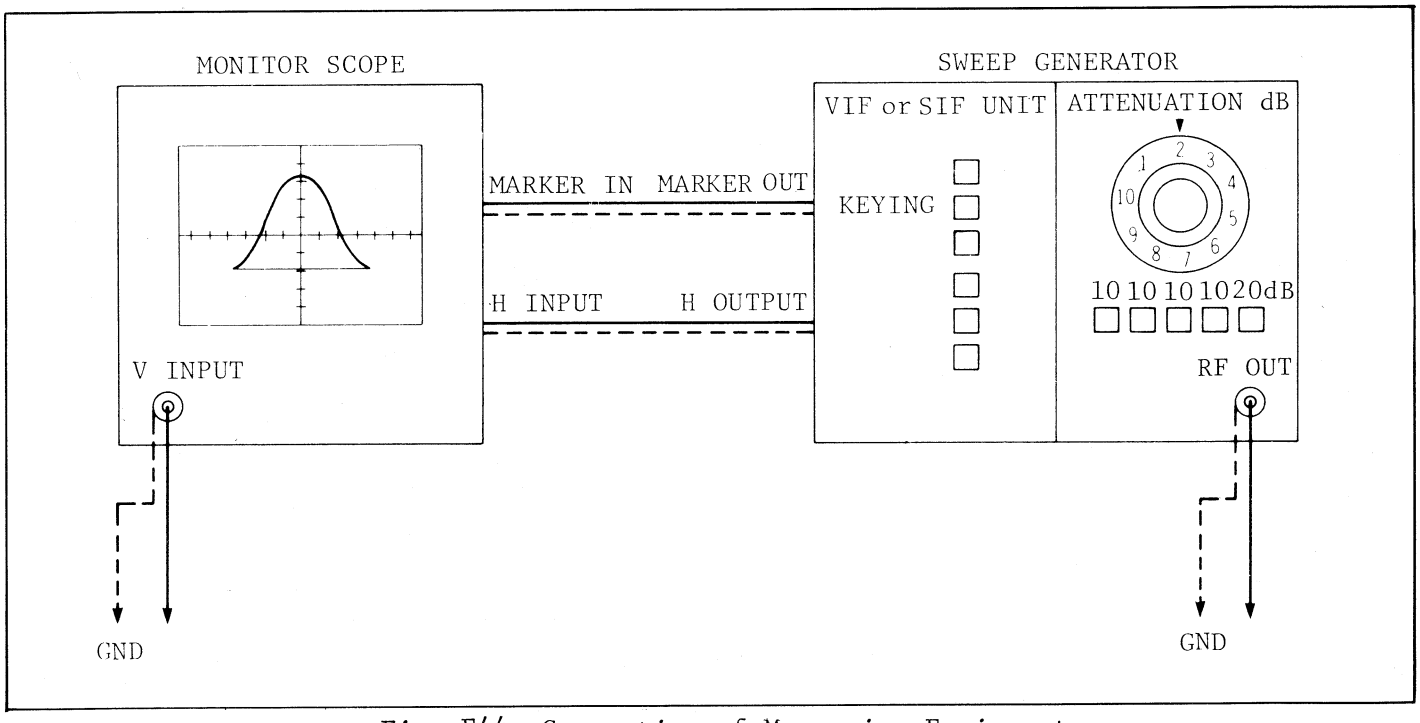

Fig. E44 Connection of Measuring Equipment

8. Adjust the output of the VIF Sweep Generator so that the level of VIF waveform becomes 1.0Vp-p.
9. Release 20dB from the attenuator of the Sweep Generator.
10. Set the DC Power Supply at TP709, and supply the Voltage so that the level of VIF waveform becomes 1.0Vp-p.
11. Adjust T702 so that the attenuation of the 33.5MHz trap becomes minimum.
12. Adjust T701 (a) so that the attenuation of the 41.5MHz trap becomes minimum.
13. Adjust the Tuner Converter Coil, IF AMP Coil T700 and HLB Transformer T701 so that the sweep output waveform becomes as follows.

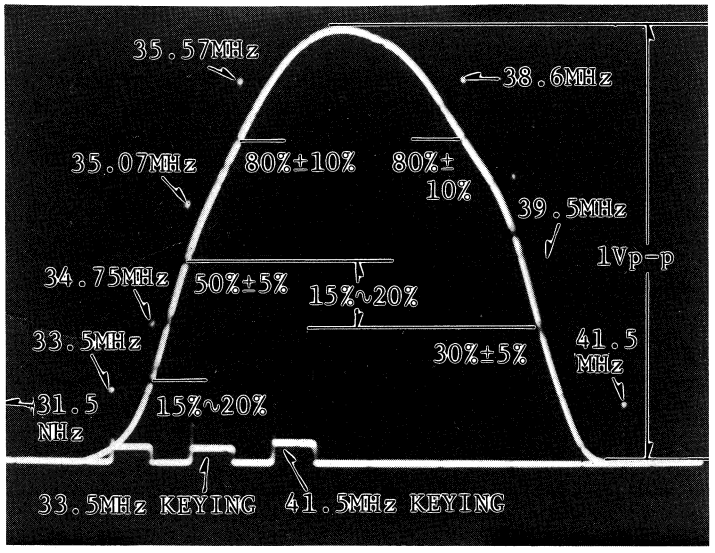

Fig. E45 VIF Waveform

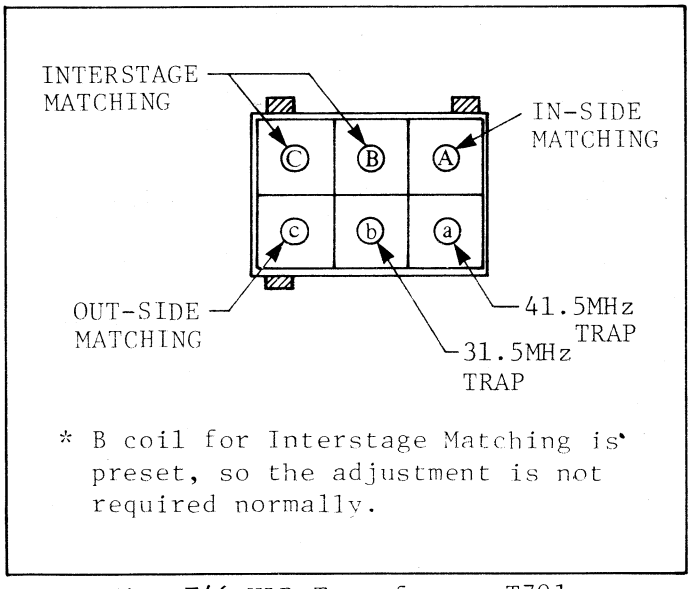

Fig. E46 HLB Transformer T701

2-8-2. Selective Coil Adjustment

1. Connection of measure equipments is the same as in the VIF Sweep Adjustment.
2. Connect the output of the VIF Sweep Generator to TP703.
3. Connect the monitor scope to TP707.
4. Supply the DC Voltage (6.0 ~ 6.5V) to TP709 so that the noise level on the sweep waveform becomes minimum.
5. Turn T704 2 turns clockwise or counterclockwise.
6. Adjust the output of the VIF Sweep Generator so that the sweep wave becomes 2Vp-p.
7. Adjust T703 so that the marker position at 39.5MHz is the peak of the wave as shown below.

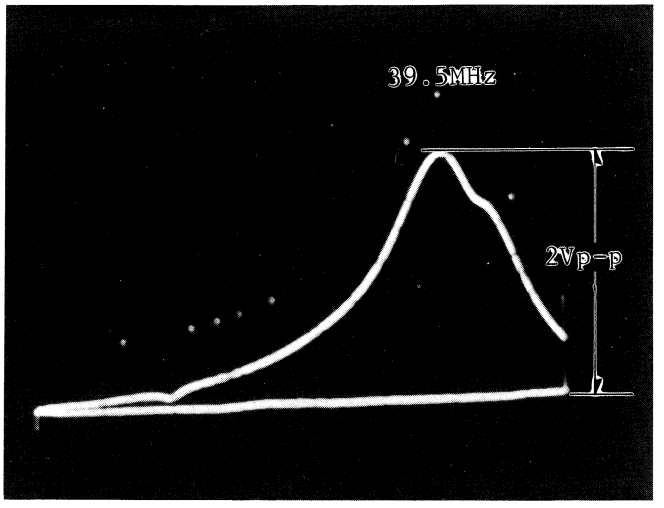

Fig. E47

8. After above adjustment, adjust T704 so that the marker position at 39.5MHz is as shown below.

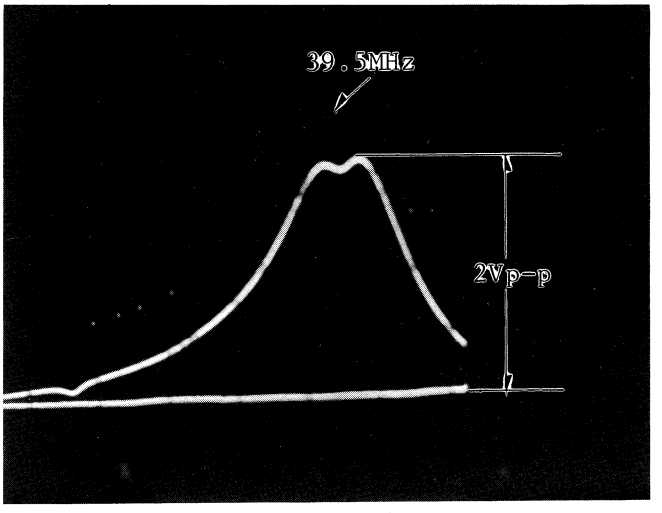

Fig. E48

2-8-3. SIF Sweep ADjustment

1. Connect the H-Out of the SIF Sweep Generator to the H-In of the monitor scope.
2. Connect the Marker-Out of the SIF Sweep Generator to the Marker-In or Z-Terminal of the monitor scope.
3. Connect the oscilloscope to the output of the SIF Sweep Generator and set the sweep output to 700mVp-p.
4. Connect the output of the SIF Sweep Generator to TP706.
5. Connect the monitor scope to TP710.
6. Turn R755 fully clockwise.
7. Adjust T752 so that the attenuation of 6.0MHz trap becomes minimum.
8. Adjust T751 for maximum peak-to-peak amplitude of response "S" curve as shown below.

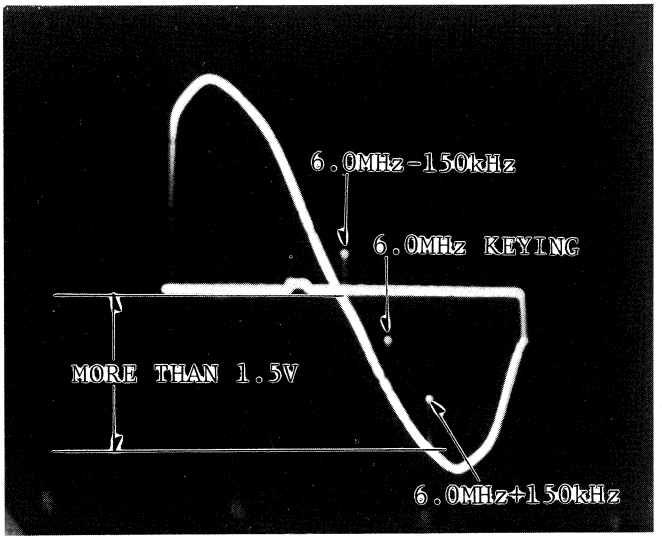

Fig. E49 SIF Wave form

9. Confirm that the level between the 150kHz marker position is more than 1.5Vp-p.

2-8-4. AFC Adjustment

1. Set the CW oscillator so that the 39.5MHz CW signal becomes 1Vp-p.
2. Supply this signal to the Tuner Test Point.
3. Turn the tuning volume so that the voltage at BT terminal of the Tuner becomes 15 ± 1V.
4. Connect the Digital Voltmerter to the Tuner AFC terminal TP702.
5. Confirm the reading "A" of the Digital Voltmeter is between 6.4V and 6.8V, when the AFC switch is off.
6. Set the AFC switch is "ON".
7. Adjust T704 so that the level at the Tuner AFC terminal TP702 becomes "A" ± 0.3V.
8. Change the frequency of the CW oscillator ±100kHz, centered at 39.5MHz and confirm that the difference of the AFC voltage is more than ±3V.

2-8-5. Confirmation of Video Level and Adjustment of Burst Level

1. Supply the PAL Standard Colour Bar signal to RF In terminal and tune this signal and set the AFC SW.
2. Connect the oscilloscope to TP711.
3. Confirm that the video level at TP711 is 1.0 ± 0.2Vp-p.
4. Adjust resistor R728 so that the burst level becomes 240 ± 10mVp-p as shown below.

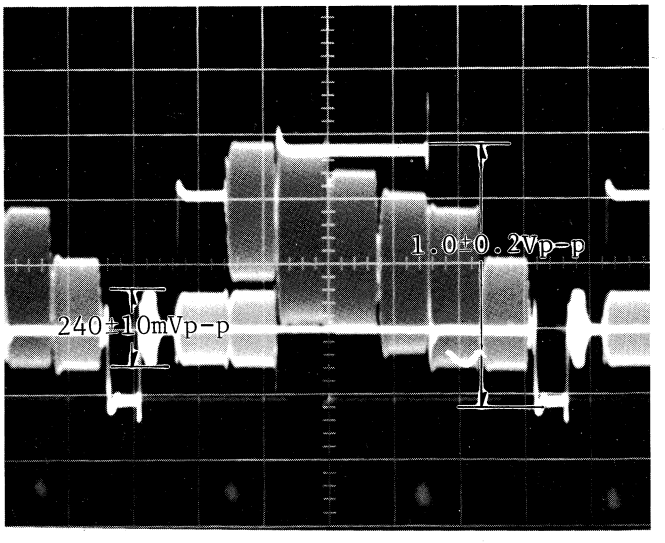

Fig. E50

Note (NV-777-B only):
Not to operate the protection circuit of radar disturbance and to operate the antenna booster always, please connect a jumper wire between P703-1 and P703-3.

LOCATION OF TEST POINTS & CONTROLS

POWER SUPPLY & SYSTEM CONTROL P.C.B UNIT (VEP06179A)

Power Supply & System Control P.C.B. Unit

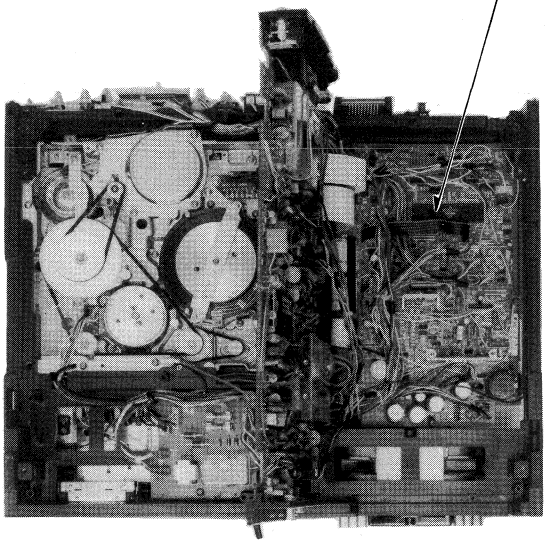

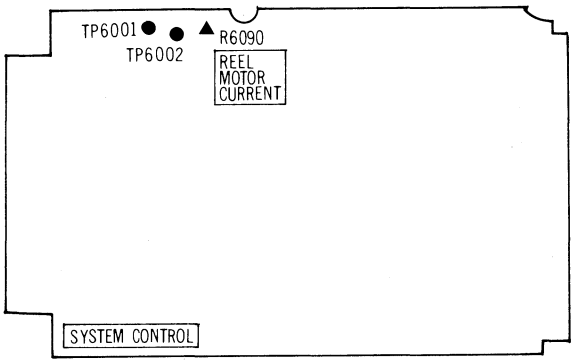

LUMINANCE , CHROMINANCE & AUDIO P.C.B UNIT (VEP03150A/B)

Luminance, Chrominance & Audio P.C.B. Unit

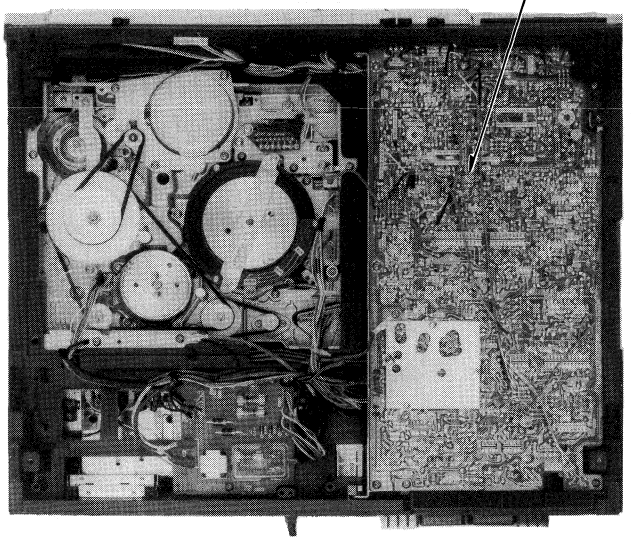

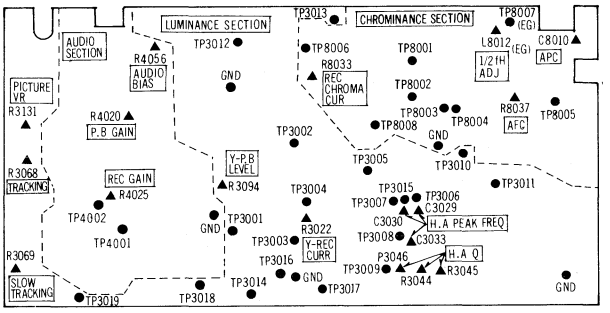

SERVO P.C.B UNIT (VEP02155A)

Servo P.C.B. Unit

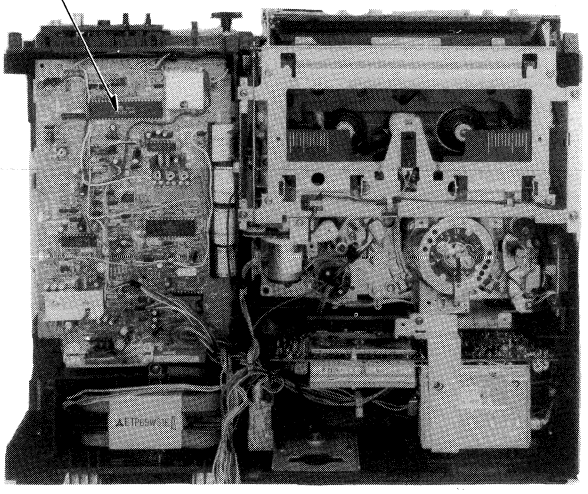

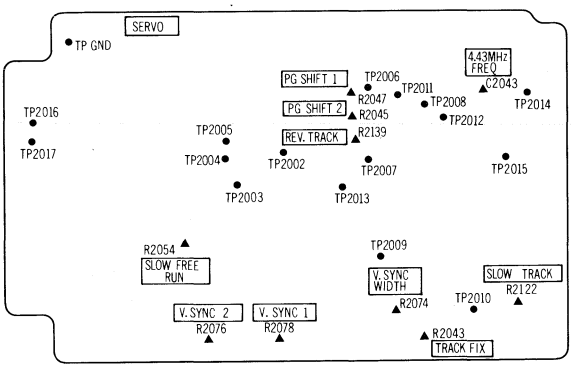

TIMER DECODER P.C.B UNIT (VEP07147A/B)

Timer Decoder P.C.B. Unit

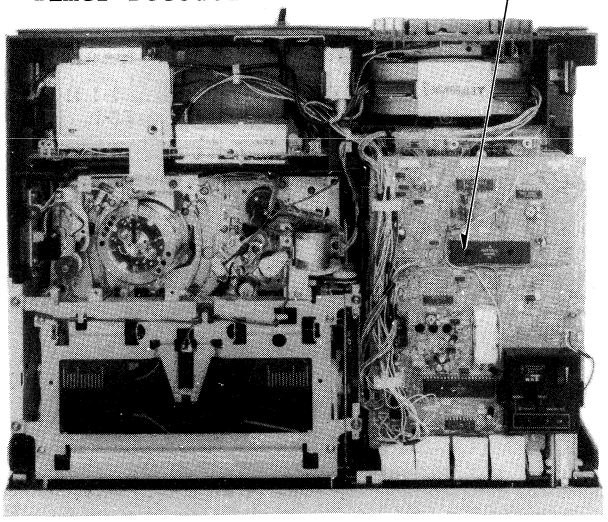

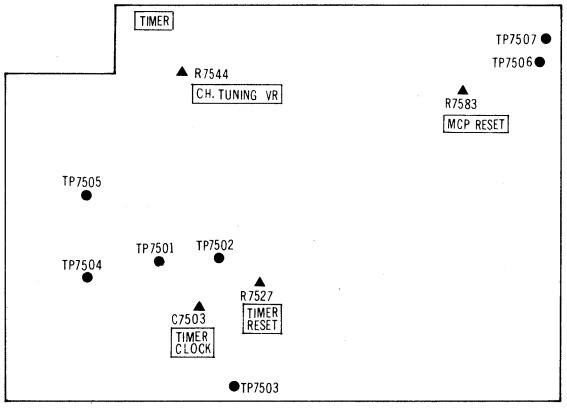

TV DEMODURATOR P.C.B UNIT (VEP07149A/B)

TV Demodulator P.C.B. Unit

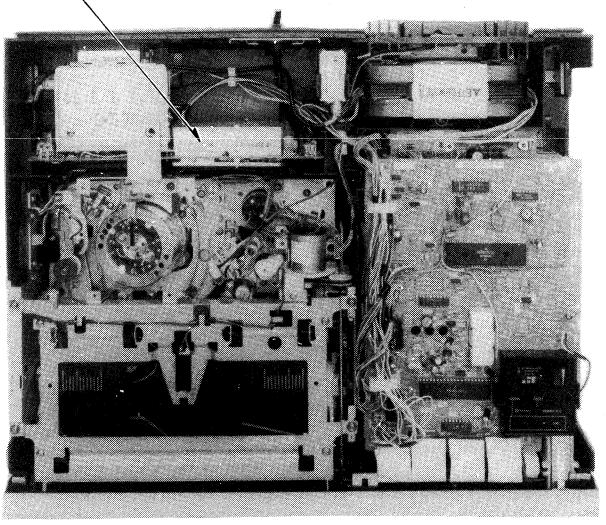

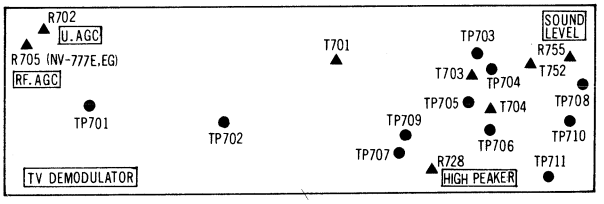

INFRARED REMOTE CONTROL RECEIVER P.C.B UNIT (VEP06178A)

IR Remote Control REceiver P.C.B. Unit

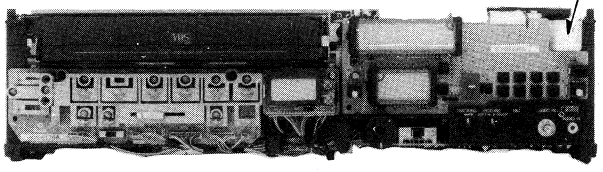

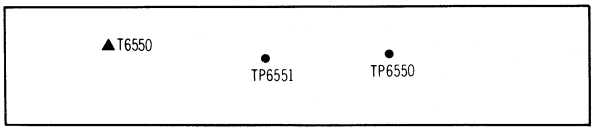

ORDER NO. VRD-8207-110

Service Manual

Video Cassette Recorder

Vol. 3

Panasonic VHS

NV-777 -E -EG -B

Block Diagrams
Schematic Diagrams

SPECIFICATIONS

Power Source:	220V AC 50/60Hz (NV-777-E, EG) 240V AC 50/60Hz (NV-777B)
Power Consumption:	Approx. 38 watts
Television System:	CCIR: 625 lines, 50 fields PAL colour signal (NV-777-E/-B) CCIR: 625 lines, 50 fields PAL/SECAM (DDR) colour signal (NV-777-EG)
Video Recording System:	2 rotary heads, helical scanning system Luminance: FM azimuth recording Colour signal: converted subscarrier phase shift recording
Audio Track:	1 track
Tape Format:	Tape width 12.7mm high density tape
Tape Speed:	23.39mm/s
Record/Playback Time:	240 min. with NV-E240
FF/REW Time:	Less than 4.5 min. with NV-E180
Heads:	Video: 3 rotary heads 1 pair for normal recording and playback (R-L Head) 1 pair for trick play (L-L′ Head) (field still and slow) Audio/Control: 1 stationary head Erase: 1 full track erase
Input Level:	Video: VIDEO IN connector (BNC) 1.0Vp-p, 75Ω terminated Audio: LINE IN jack More than −20dB, 50kΩ
Output Level:	Video: VIDEO OUT connector (BNC) 1.0Vp-p, 75Ω terminated Audio: LINE OUT jack −6dB, less than 1kΩ RF Modulated: UHF channel 36 ± 4CH 73dBμ ± 4dBμ 75Ω terminated
Weight:	10.4kg
Dimensions:	430(W) × 115(H) × 372(D)mm
Accessory Supplied:	1 pc. DIN-RF Cable VJA0130 1 pc. Video Cassette Tape (NV-777-E/-B) 1 pc. Wireless Remote Controller, NV-A17-E
Optional Accessories:	Video cassette tape: NV-E240 Approx. 344m, 240 min. NV-E180 Approx. 258m, 180 min. NV-E120 Approx. 174m, 120 min. NV-E60 Approx. 88m, 60 min. Video Camera, WV-2600E, WV-3000E, WV-3200E

Weight and dimensions shown are apparoximate.
Specifications are subject to change without notice.

Panasonic

Matsushita Electric Trading Co., Ltd.
P.O. Box 288, Central Osaka Japan

CONTENTS

SPECIFICATIONS .....Cover
BLOCK DIAGRAM 3-1
SYSTEM CONTROL 3-1
PROGRAMMABLE TIMER 3-2
SERVO 3-3
LUMINANCE PROCESS 3-4
CHROMINANCE PROCESS 3-5
TV DEMODULATOR & SYNTHESIZER TUNER(NV-777E,EG) 3-6
TV DEMODULATOR & SYNTHESIZER TUNER(NV-777B) 3-7
INFRARED TRANSMITTER 3-8
SMALL CIRCUIT BOARD 3-9
A.C. CIRCUIT 3-10
POWER SUPPLY CIRCUIT 3-10
MICRO PROCESSOR TIMING CHART 3-13
SYSTEM CONTROL CIRCUIT 3-13
OPERATION CIRCUIT 3-14
SERVO CIRCUIT 3-14
E.COUNTER & TAPE REMAIN CIRCUIT 3-15
AUDIO CIRCUIT 3-17
LUMINANCE,CHROMINANCE CIRCUIT 3-19
TIMER DECODER & TIMER OPERATION CIRCUIT 3-21
TIMER DECODER & TIMER OPERATION CIRCUIT(NV-777B) 3-22
TV DEMODULATOR CIRCUIT(NV-777E,EG)..... 3-24
TV DEMODULATOR CIRCUIT(NV-777B) 3-26
RF CONVERTER CIRCUIT(NV-777E,EG) 3-28
RF CONVERTER CIRCUIT(NV-777B) 3-29
IR WIRELESS RECEIVER CIRCUIT 3-30
IR WIRELESS TRANSMITTER CIRCUIT 3-30
CIRCUIT BOARD LAYOUT 3-31
INTER CONNECTION SCHEMATIC DIAGRAM 3-32

SYSTEM CONTROL BLOCK DIAGRAM

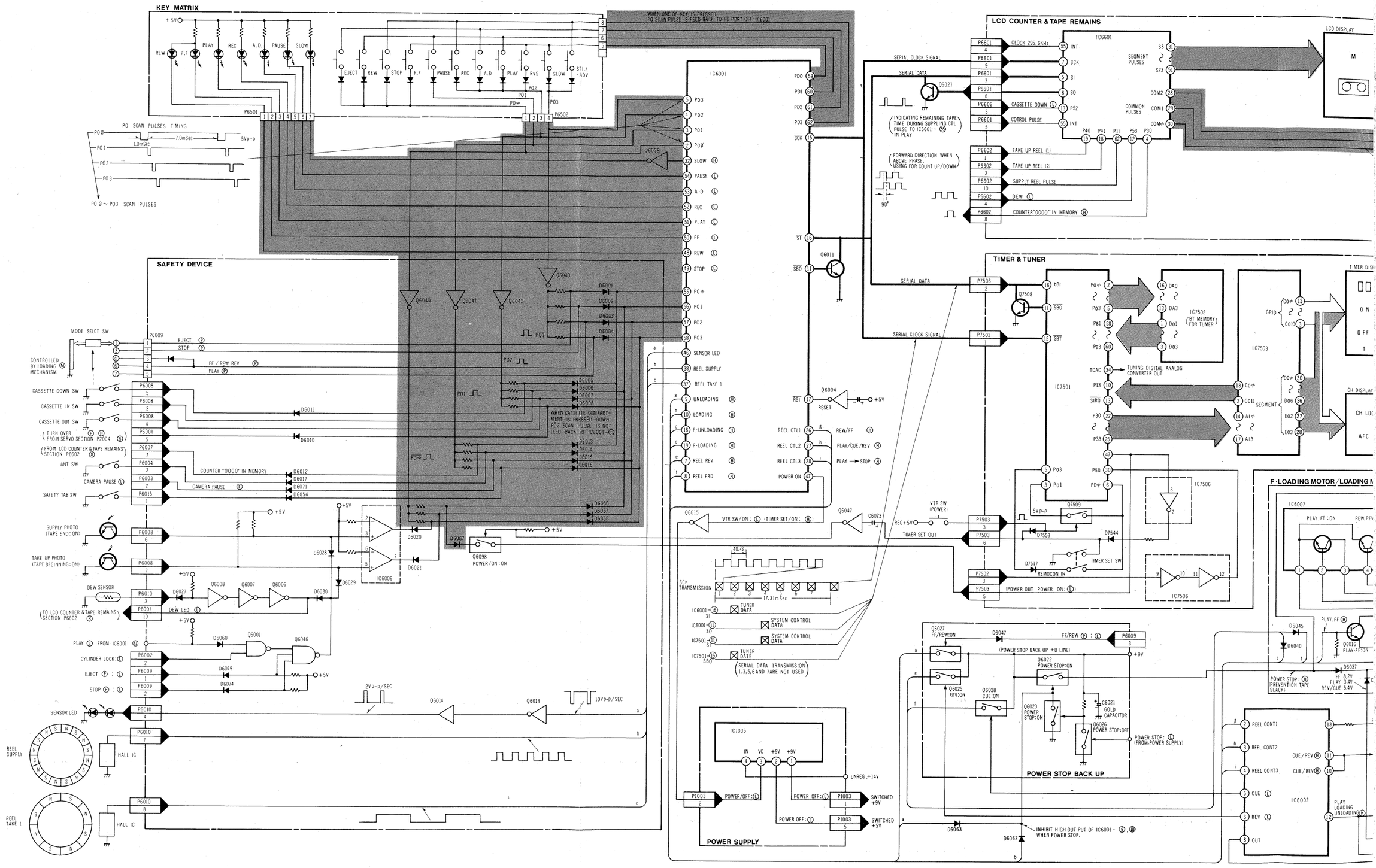

AM

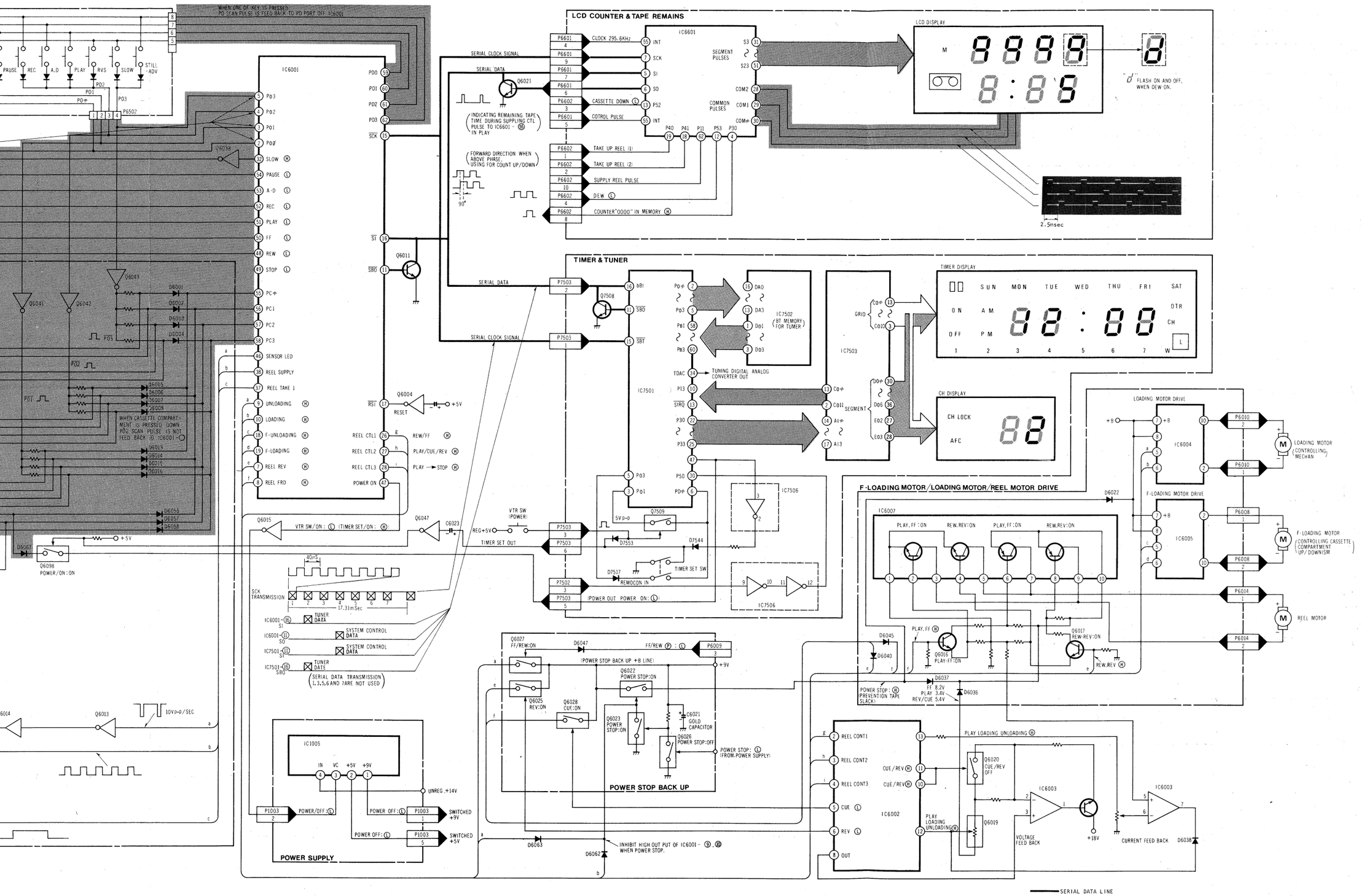
LCD COUNTER & TAPE REMAINS
LCD DISPLAY
IC6601
SERIAL CLOCK SIGNAL
SERIAL DATA
CLOCK 295.6KHz
CASSETTE DOWN
COTROL PULSE
SEGMENT PULSES
COMMON PULSES
TAKE UP REEL (1)
TAKE UP REEL (2)
SUPPLY REEL PULSE
DEW
COUNTER"0000" IN MEMORY
INDICATING REMAINING TAPE TIME DURING SUPPLING CTL PULSE TO IC6601 - 55 IN PLAY
FORWARD DIRECTION WHEN ABOVE PHASE USING FOR COUNT UP/DOWN
"0" FLASH ON AND OFF, WHEN DEW ON.
2.5msec
TIMER & TUNER
TIMER DISPLAY
SUN MON TUE WED THU FRI SAT
ON AM
OFF PM
CH LOCK
AFC
IC7501
IC7502 (BT MEMORY FOR TUMER)
IC7503
IC7506
TUNING DIGITAL ANALOG CONVERTER OUT
VTR SW (POWER)
TIMER SET OUT
REMOCON IN
TIMER SET SW
(POWER OUT POWER ON: L)
SCK TRANSMISSION
17.31mSec
TUNER DATA
SYSTEM CONTROL DATA
SERIAL DATA TRANSMISSION 1,3,5,6 AND 7ARE NOT USED
F-LOADING MOTOR/LOADING MOTOR/REEL MOTOR DRIVE
IC6007
PLAY.FF:ON
REW.REV:ON
LOADING MOTOR DRIVE
F-LOADING MOTOR DRIVE
IC6004
IC6005
LOADING MOTOR (CONTROLLING MECHAN)
F-LOADING MOTOR (CONTROLLING CASSETTE COMPARTMENT UP/DOWNISM)
REEL MOTOR
POWER STOP: H (PREVENTION TAPE SLACK)
FF 8.2V
PLAY 3.4V
REV/CUE 5.4V
POWER STOP BACK UP
(POWER STOP BACK UP +B LINE)
GOLD CAPACITOR
POWER STOP: L (FROM POWER SUPPLY)
IC1005
POWER SUPPLY
UNREG +14V
SWITCHED +9V
SWITCHED +5V
INHIBIT HIGH OUT PUT OF IC6001 - 9, 10 WHEN POWER STOP.
IC6002
PLAY LOADING UNLOADING
VOLTAGE FEED BACK
CURRENT FEED BACK
IC6003
SERIAL DATA LINE

PROGRAMMABLE TIMER BLOCK DIAGRAM

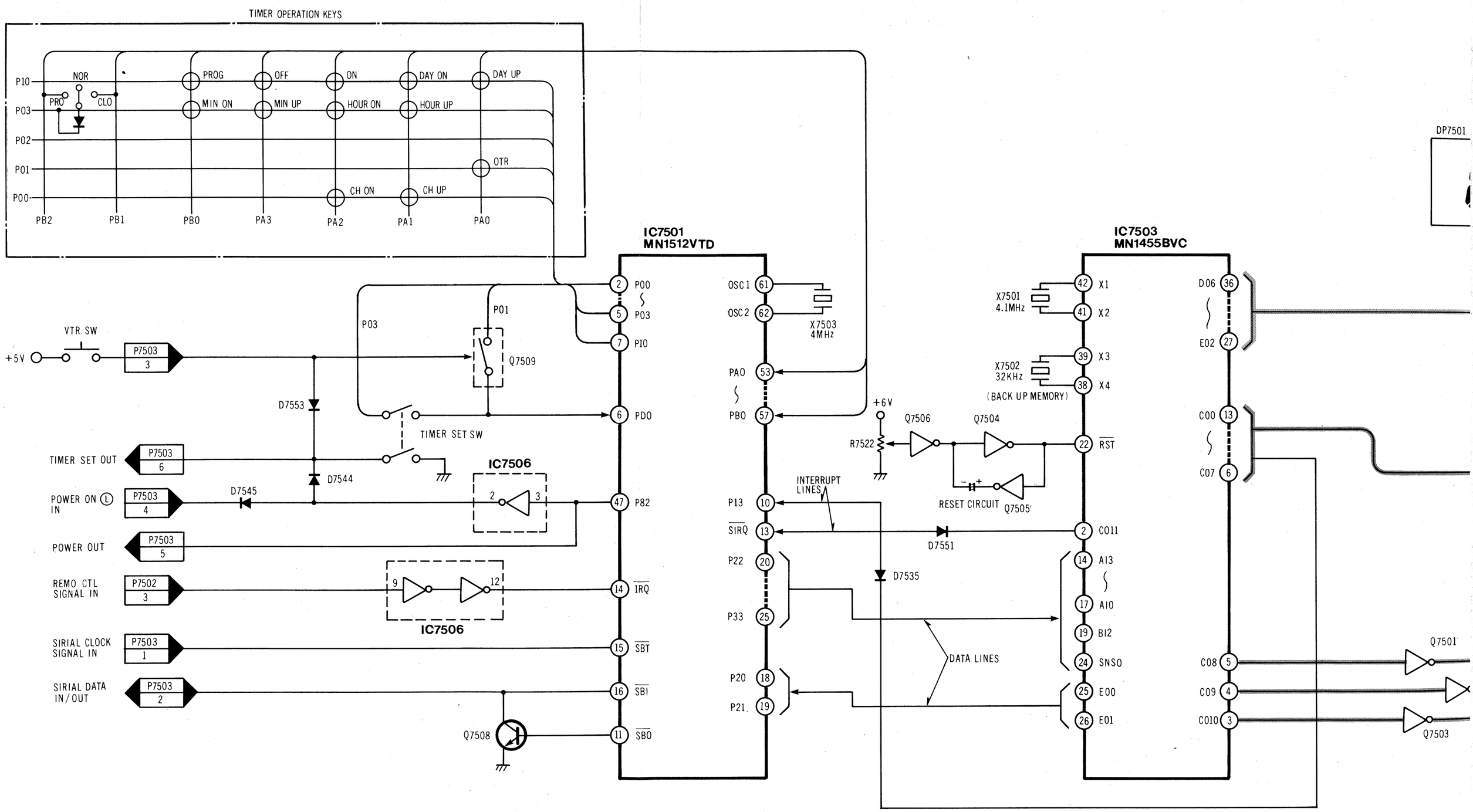

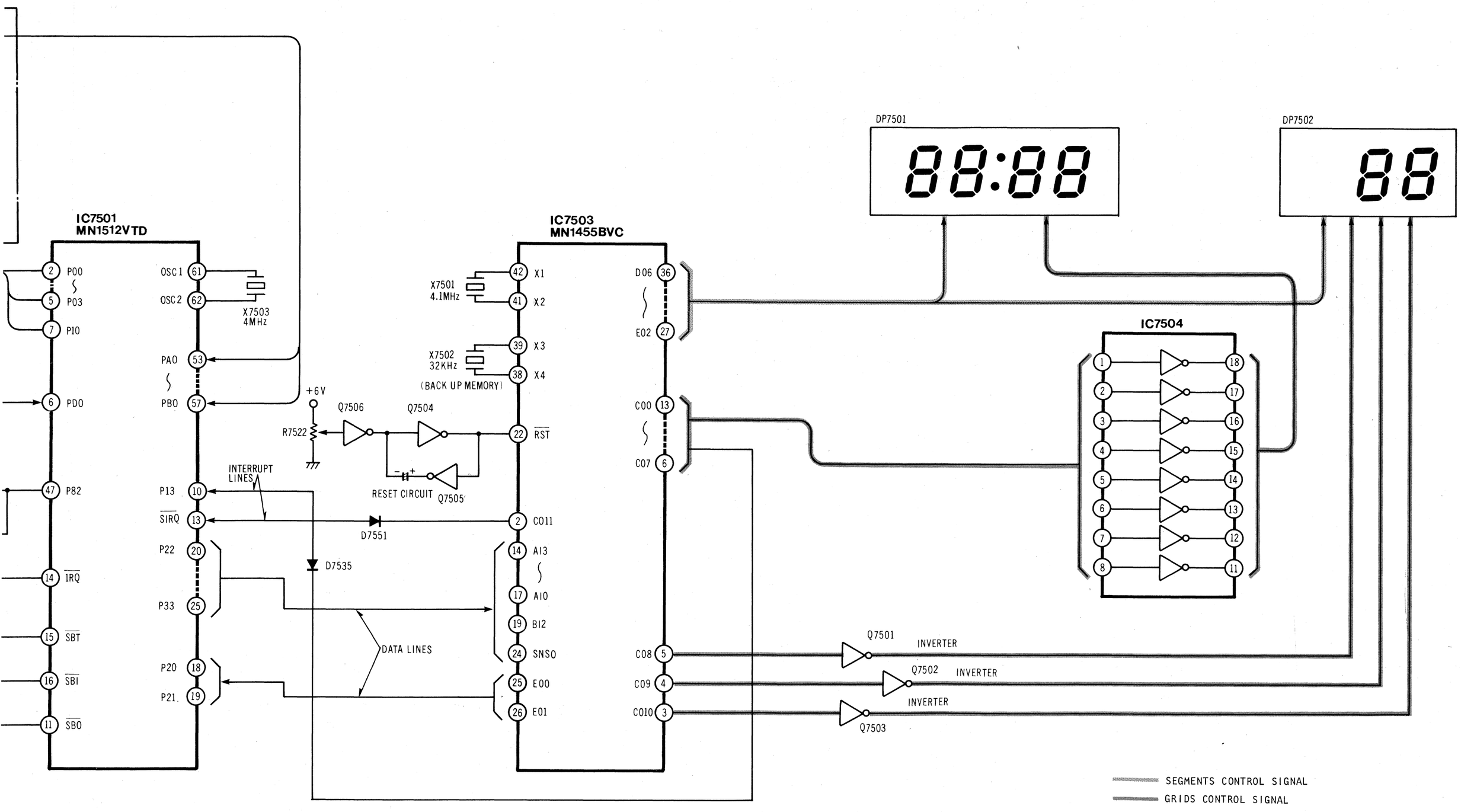
IC7501
MN1512VTD
P00
P03
P10
PDO
P82
IRQ
SBT
SBI
SBO
OSC1
OSC2
X7503
4MHz
PA0
PB0
P13
SIRQ
P22
P33
P20
P21
INTERRUPT LINES
D7535
DATA LINES
IC7503
MN1455BVC
X7501
4.1MHz
X7502
32KHz
(BACK UP MEMORY)
X1
X2
X3
X4
+6V
R7522
Q7506
Q7504
RST
RESET CIRCUIT
Q7505
D7551
CO11
AI3
AI0
BI2
SNSO
EO0
EO1
DO6
EO2
CO0
CO7
CO8
CO9
CO10
DP7501
DP7502
IC7504
Q7501
Q7502
Q7503
INVERTER
SEGMENTS CONTROL SIGNAL
GRIDS CONTROL SIGNAL

SERVO BLOCK DIAGRAM

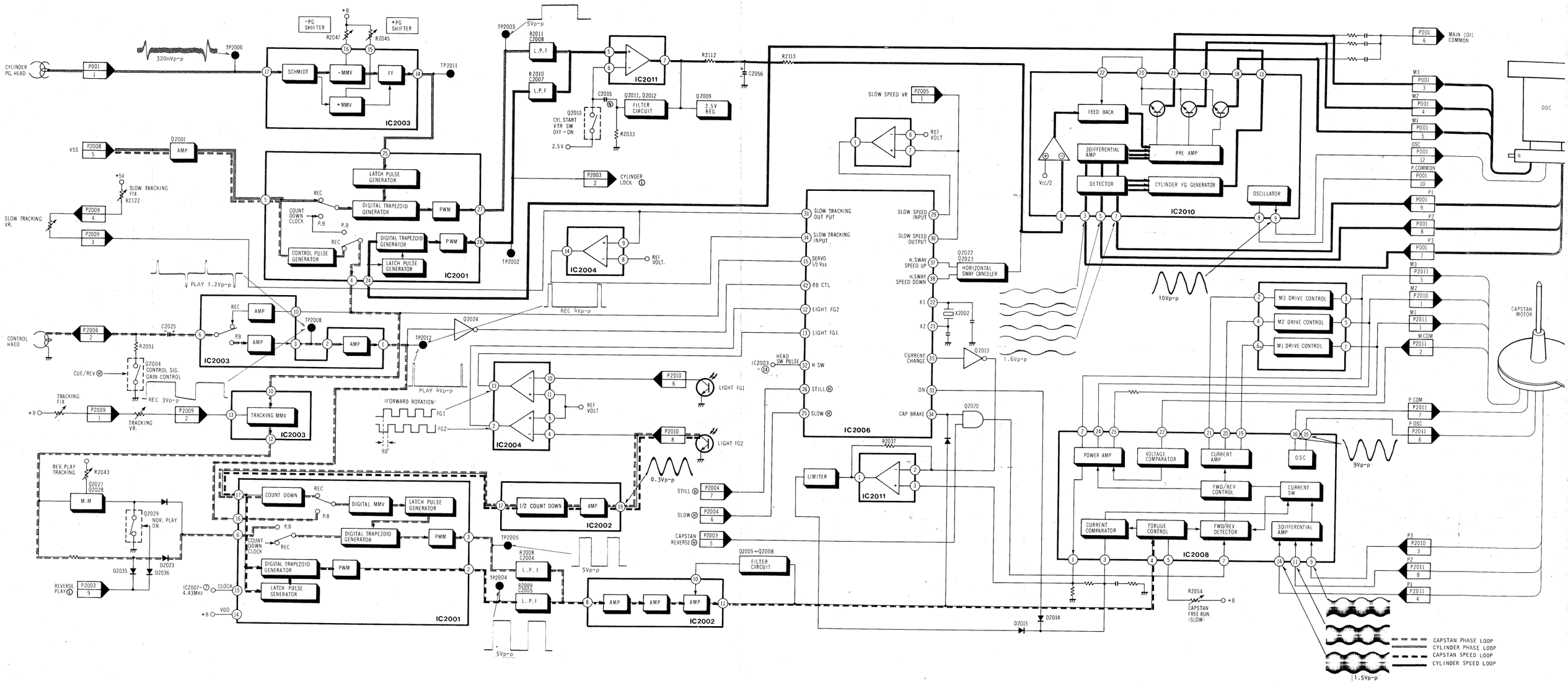

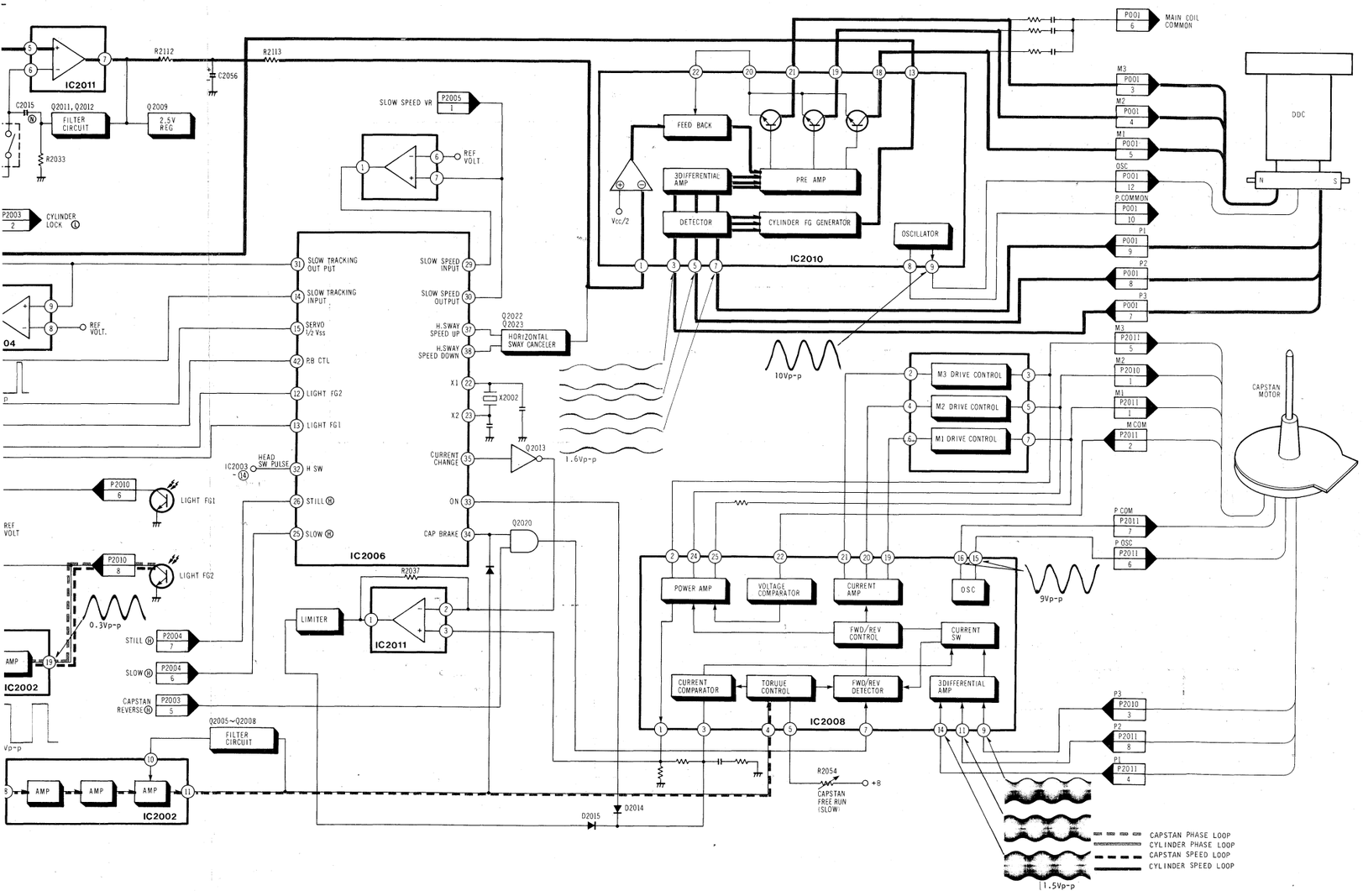

IC2006 SLOW MODE TIMING CHART 1

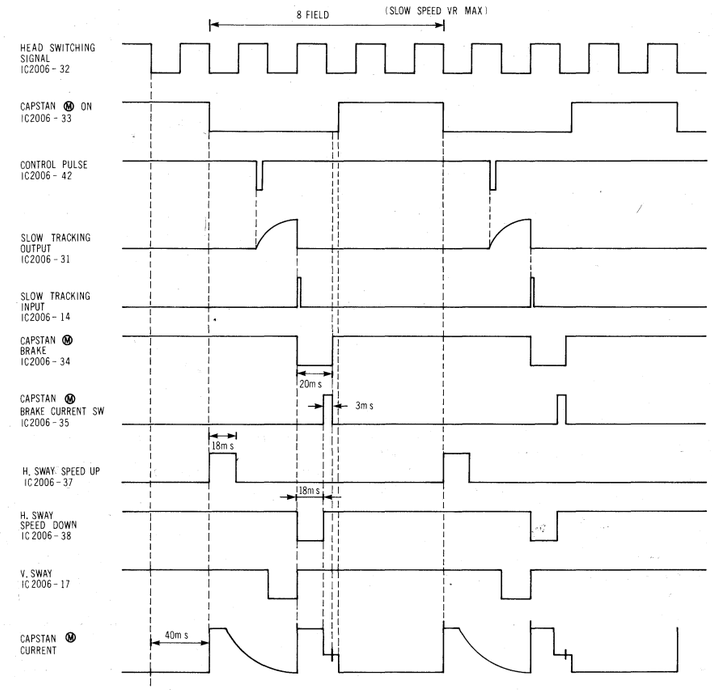

IC2006 SLOW MODE TIMING CHART 2

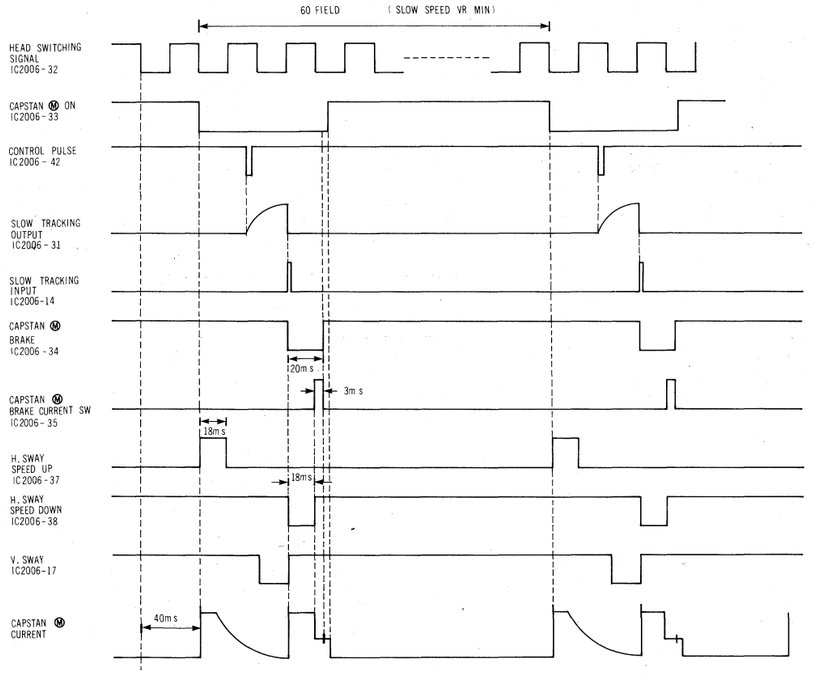

LUMINANCE PROCESS BLOCK DIAGRAM

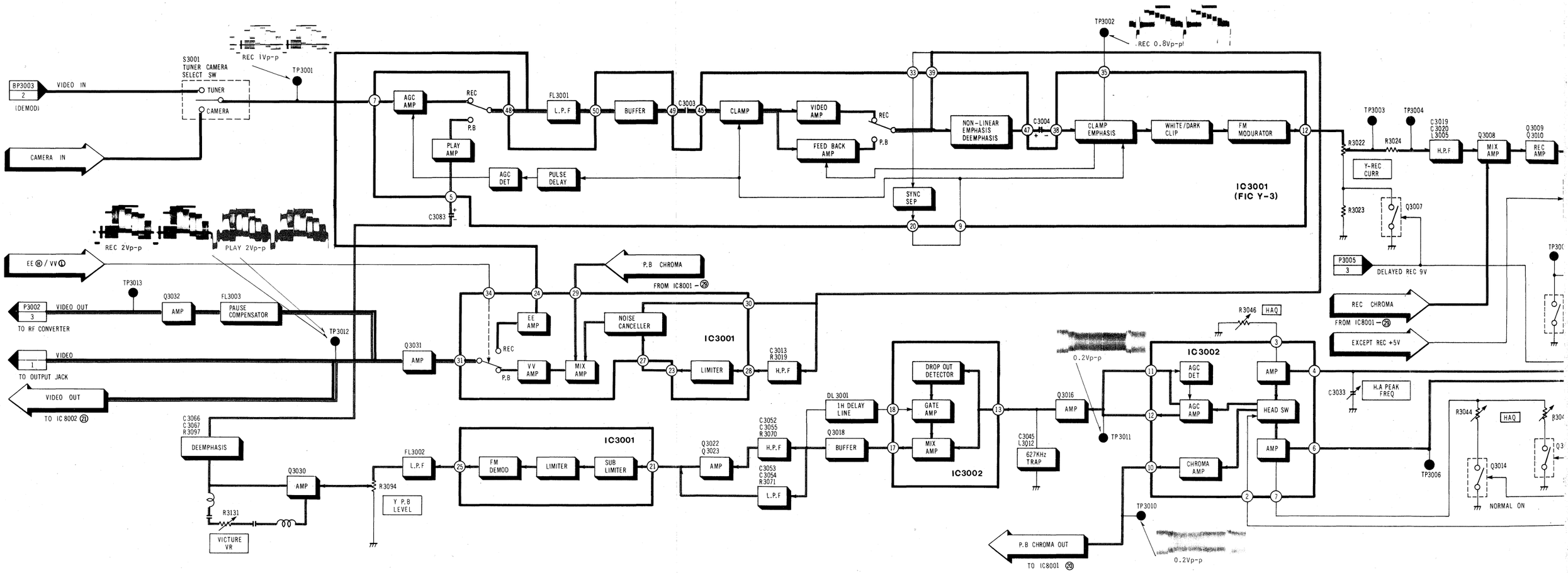

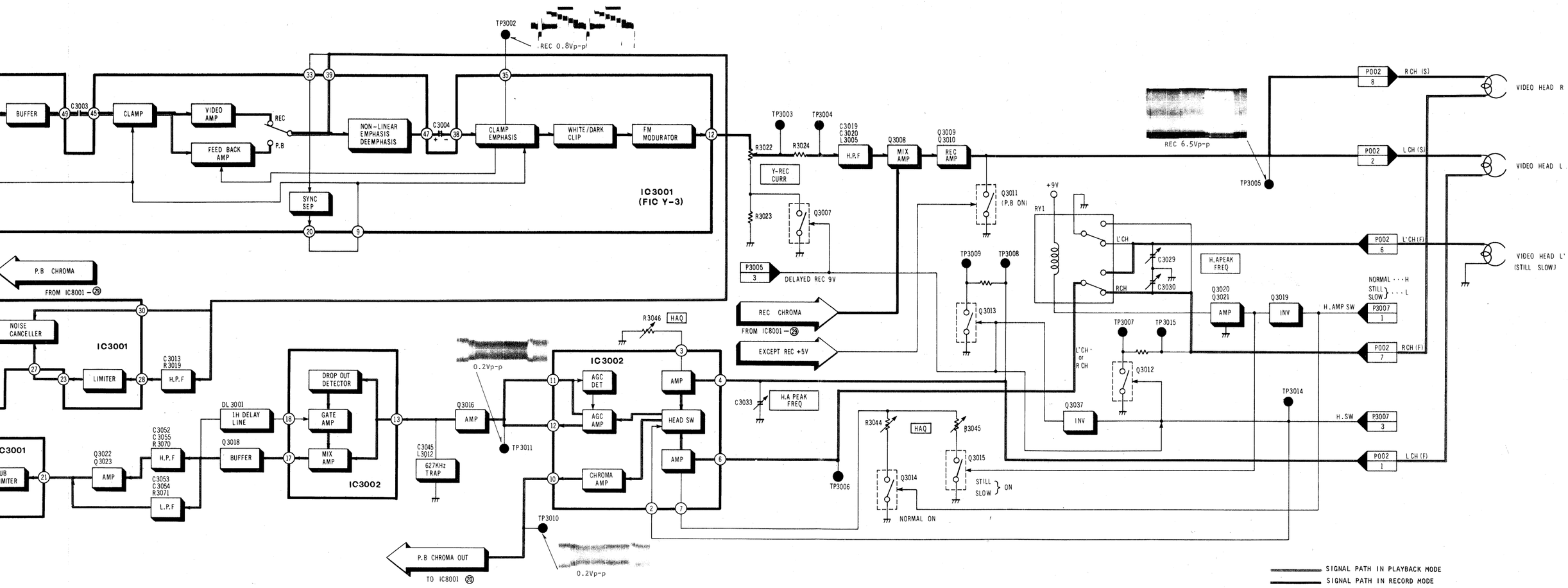
TP3002
REC 0.8Vp-p
BUFFER
C3003
CLAMP
VIDEO AMP
REC
P.B
FEED BACK AMP
NON-LINEAR EMPHASIS DEEMPHASIS
C3004
CLAMP EMPHASIS
WHITE/DARK CLIP
FM MODURATOR
SYNC SEP
IC3001 (FIC Y-3)
P.B CHROMA
FROM IC8001 — 29
NOISE CANCELLER
IC3001
LIMITER
C3013 R3019
H.P.F
C3052 C3055 R3070
H.P.F
C3053 C3054 R3071
L.P.F
Q3022 Q3023
AMP
DL3001
1H DELAY LINE
Q3018
BUFFER
DROP OUT DETECTOR
GATE AMP
MIX AMP
IC3002
C3045 L3012
627KHz TRAP
Q3016
AMP
0.2Vp-p
TP3011
R3046
HAQ
IC3002
AGC DET
AGC AMP
CHROMA AMP
AMP
HEAD SW
AMP
TP3010
P.B CHROMA OUT
TO IC8001 20
0.2Vp-p
TP3003
TP3004
R3022
R3024
Y-REC CURR
R3023
Q3007
P3005
DELAYED REC 9V
REC CHROMA
FROM IC8001 — 29
EXCEPT REC +5V
C3033
H.A PEAK FREQ
TP3006
C3019 C3020 L3005
H.P.F
Q3008
MIX AMP
Q3009 Q3010
REC AMP
Q3011 (P.B ON)
+9V
RY1
L'CH
RCH
C3029
C3030
H.APEAK FREQ
TP3009
TP3008
Q3013
TP3007
TP3015
Q3012
L'CH or RCH
Q3020 Q3021
AMP
Q3019
INV
H.AMP SW
Q3037
INV
TP3014
H.SW
R3044
HAQ
R3045
Q3014
Q3015
NORMAL ON
STILL SLOW ON
REC 6.5Vp-p
TP3005
P002 8
R CH (S)
P002 2
L CH (S)
P002 6
L'CH (F)
P002 7
RCH (F)
P002 1
L CH (F)
P3007 1
NORMAL ··· H
STILL SLOW ··· L
P3007 3
VIDEO HEAD R
VIDEO HEAD L
VIDEO HEAD L'
(STILL SLOW)
SIGNAL PATH IN PLAYBACK MODE
SIGNAL PATH IN RECORD MODE

CHROMINANCE PROCESS BLOCK DIAGRAM

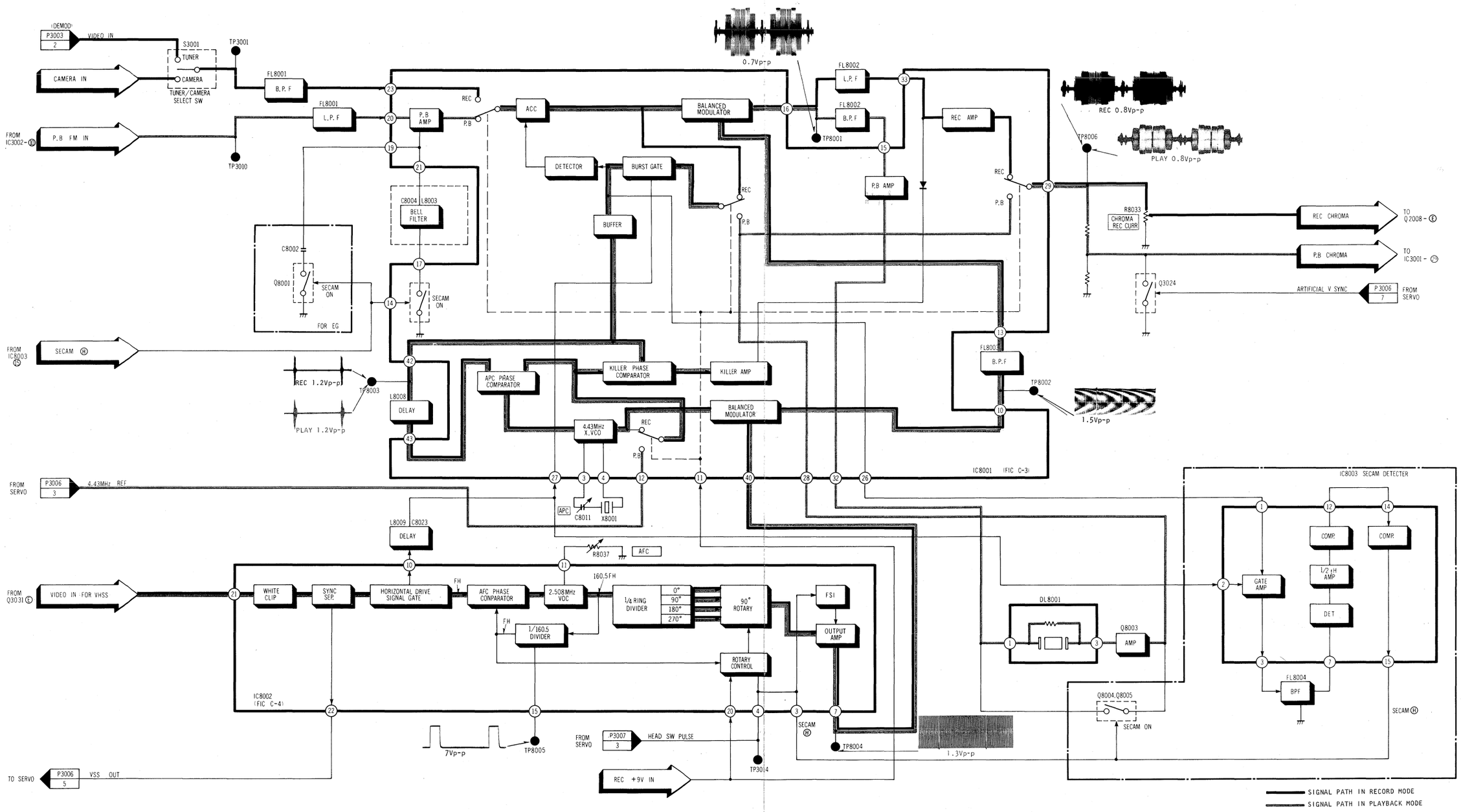

TV DEMODULATOR & SYNTHESIZER TUNER BLOCK DIAGRAM (NV-777E, EG)

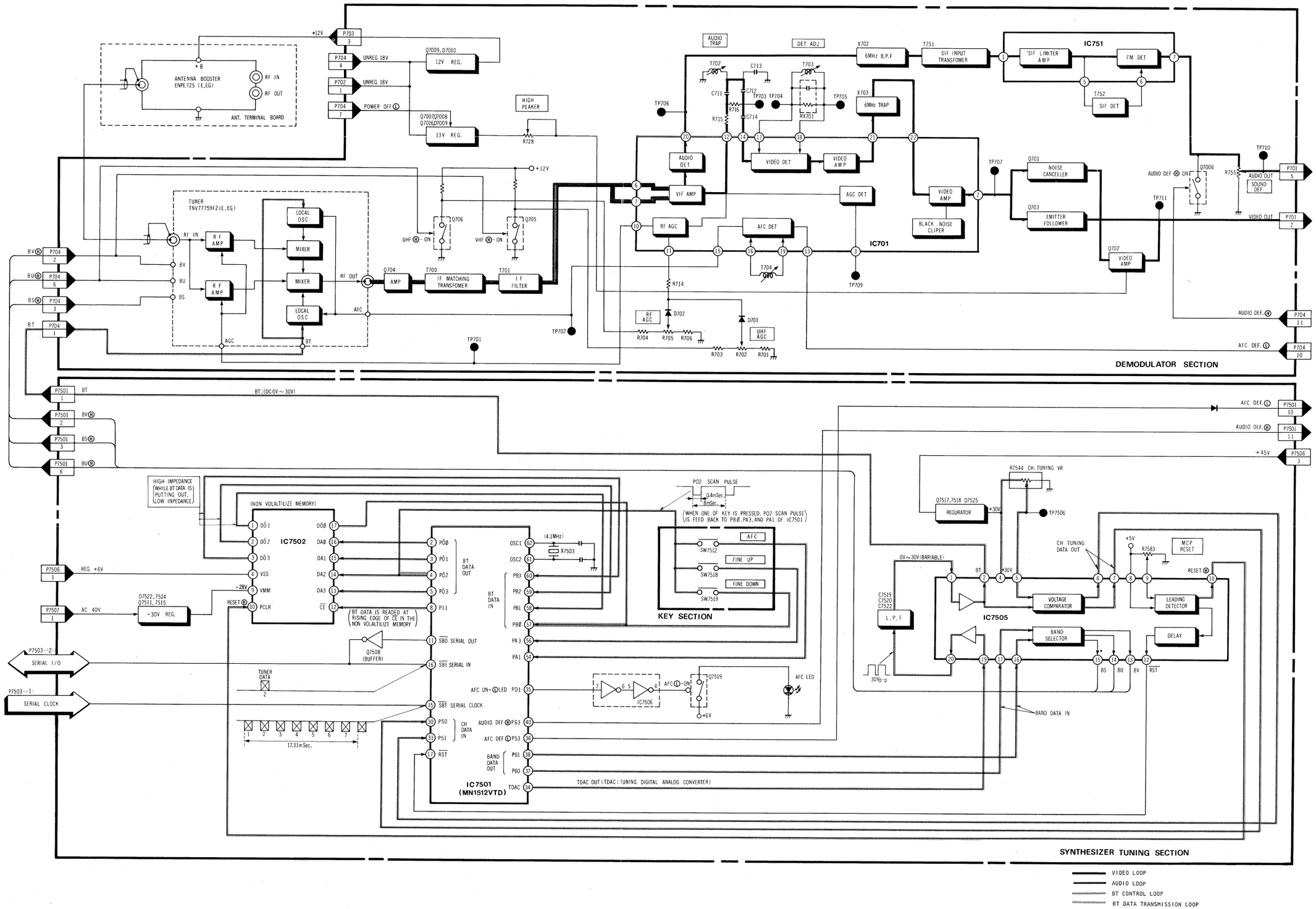

TV DEMODULATOR & SYNTHESIZER TUNER BLOCK DIAGRAM (NV-777B)

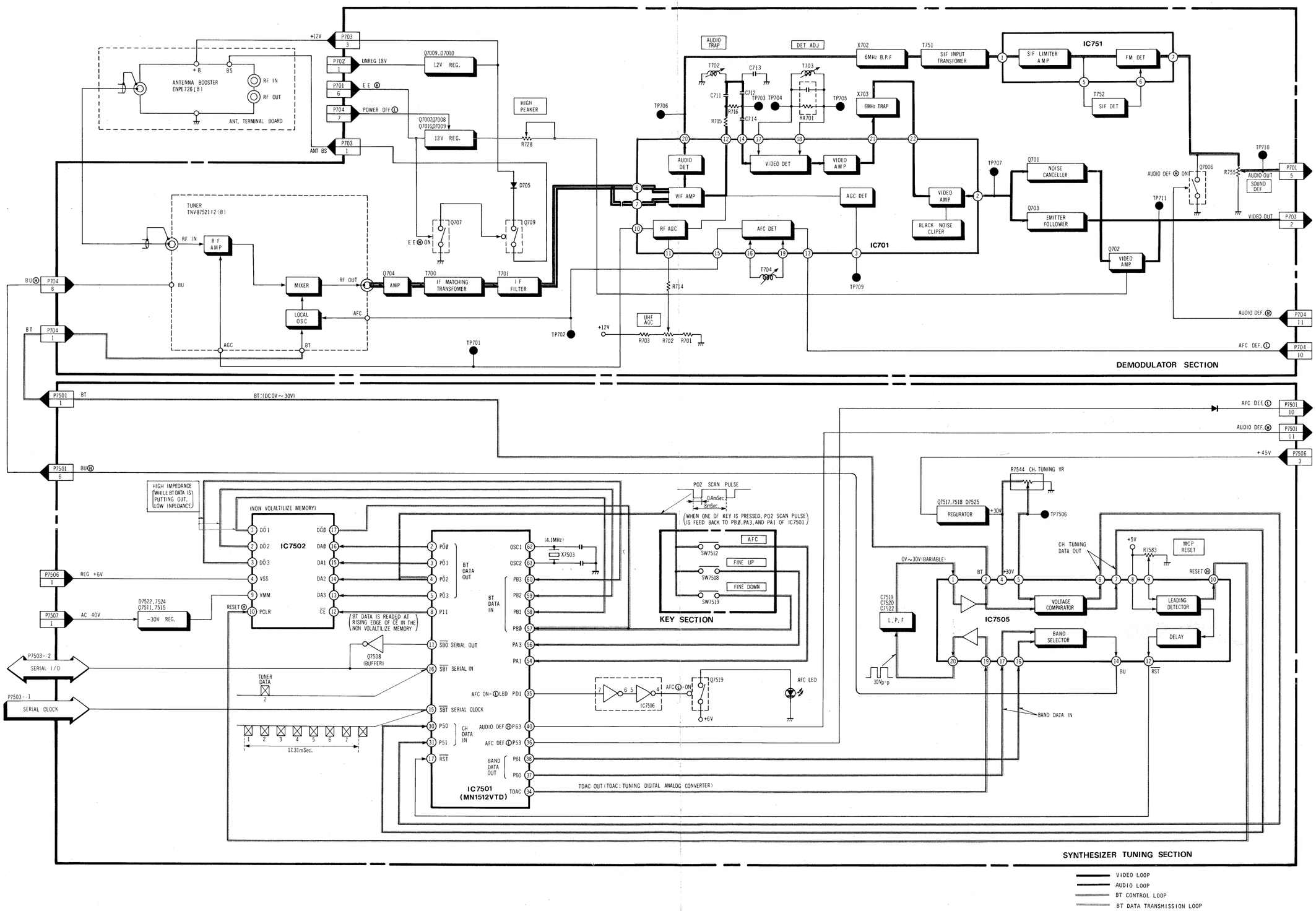

INFRARED TRANSMITTER BLOCK DIAGRAM

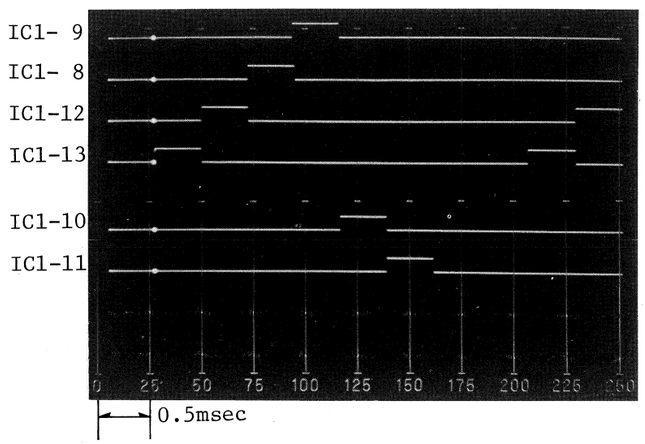

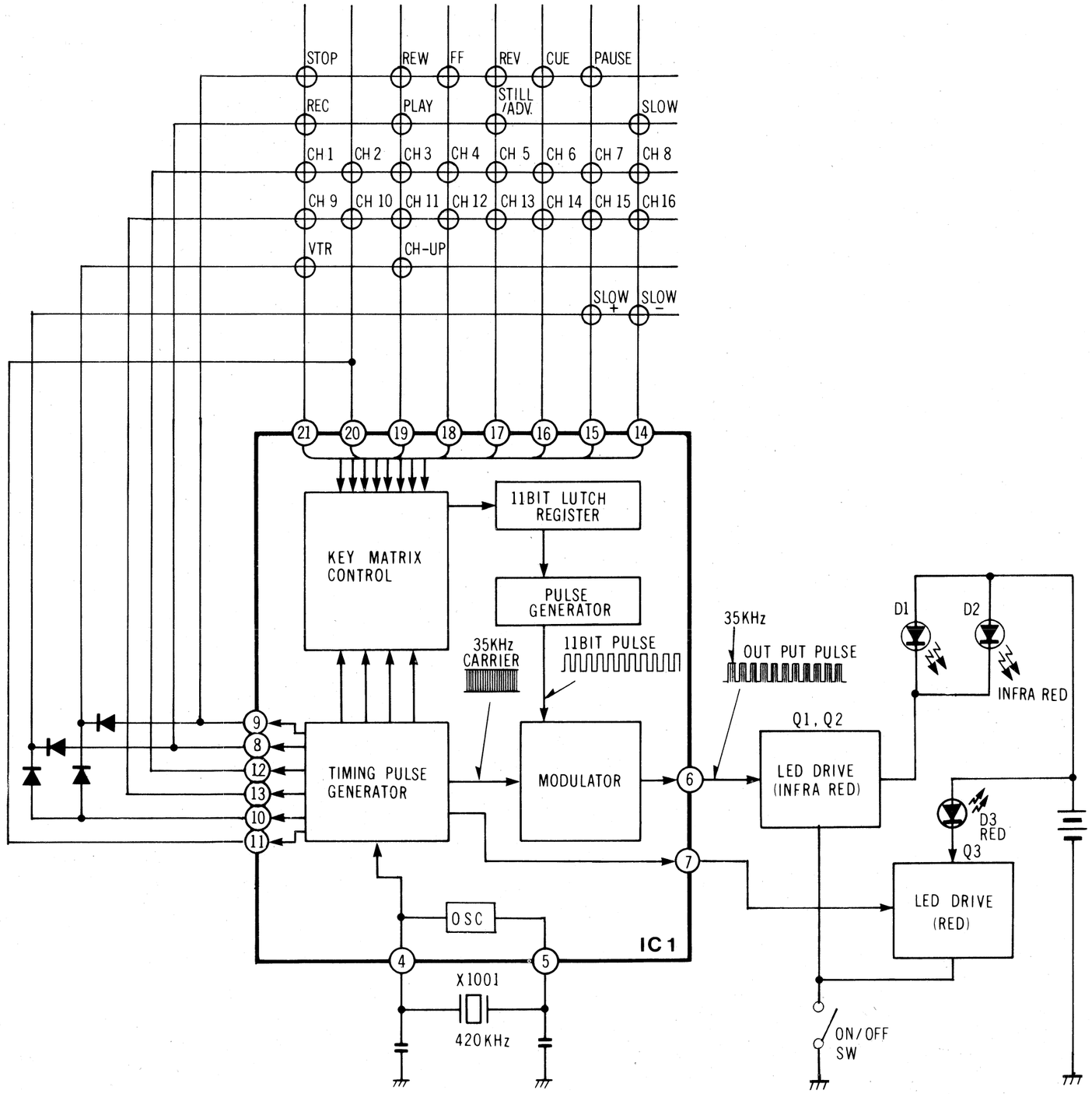

SMALL CIRCUIT BOARD

TAKE-UP PHOTO SENSOR P.C.B. (VJB00636)

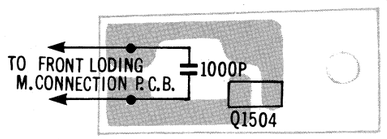

SENSOR LED P.C.B. (VJB00639)

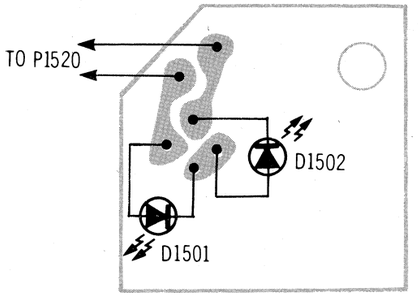

MODE SELECT SWITCH P.C.B. (VJB00726)

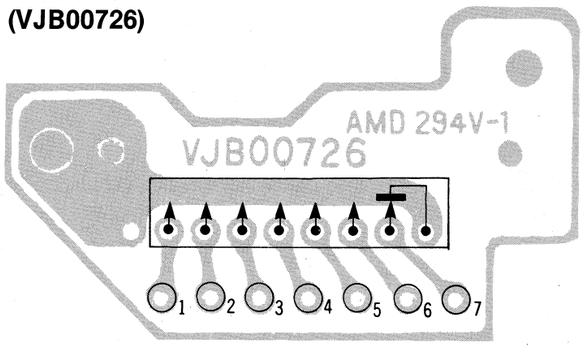

POWER IC HEATSINK P.C.B. (VJB00971)

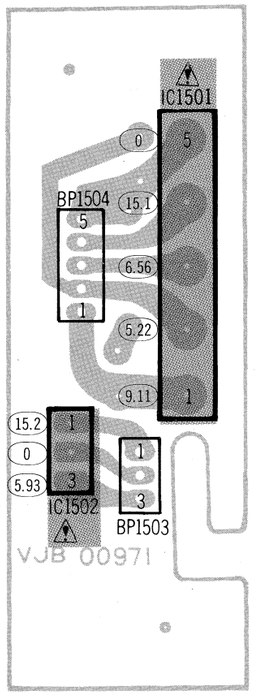

BP 1503

1	UNREG 14V
2	GND
3	+6V

BP 1504

1	9V
2	5V
3	POWER OFF Ⓛ
4	UNREG 14V
5	GND

SUPPLY PHOTO SENSOR P.C.B. (VJB00744)

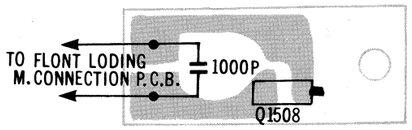

REEL MOTOR HEATSINK P.C.B. (VJB00972)

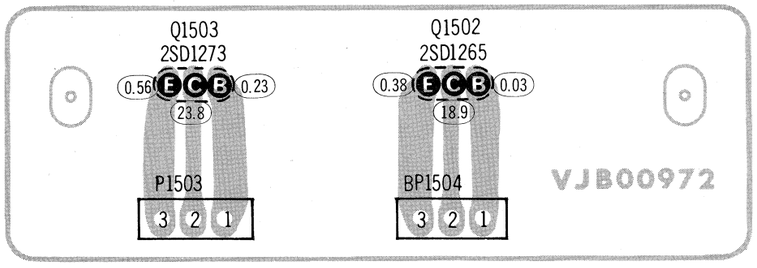

MOTOR CONNECTION P.C.B. (VJB00968)

P003

1	AC 17V
2	AC 17V

P1522

1	AC 17V
2	AC 17V

P1520

1	LED ⊕
2	GND (LED)
3	Vcc (+9V)
4	GND
5	T_2
6	T_1
7	S_1
8	———

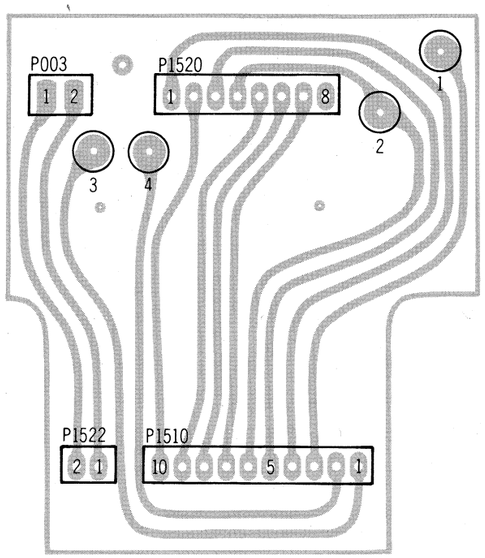

P1510

1	LOD Ⓜ ⊖
2	LOD Ⓜ ⊕
3	DEW SNS
4	SNS LED
5	+9V
6	GND
7	PEEL SUP1
8	PEEL KAC1
9	PEEL KAC2
10	GND (LED)

3	LOD Ⓜ ⊖	①
4	LOD Ⓜ ⊕	②

1	DEW SNS	①
2	GND	②

FRONT LOADING MOTOR CONNECTION P.C.B. (VJB00969)

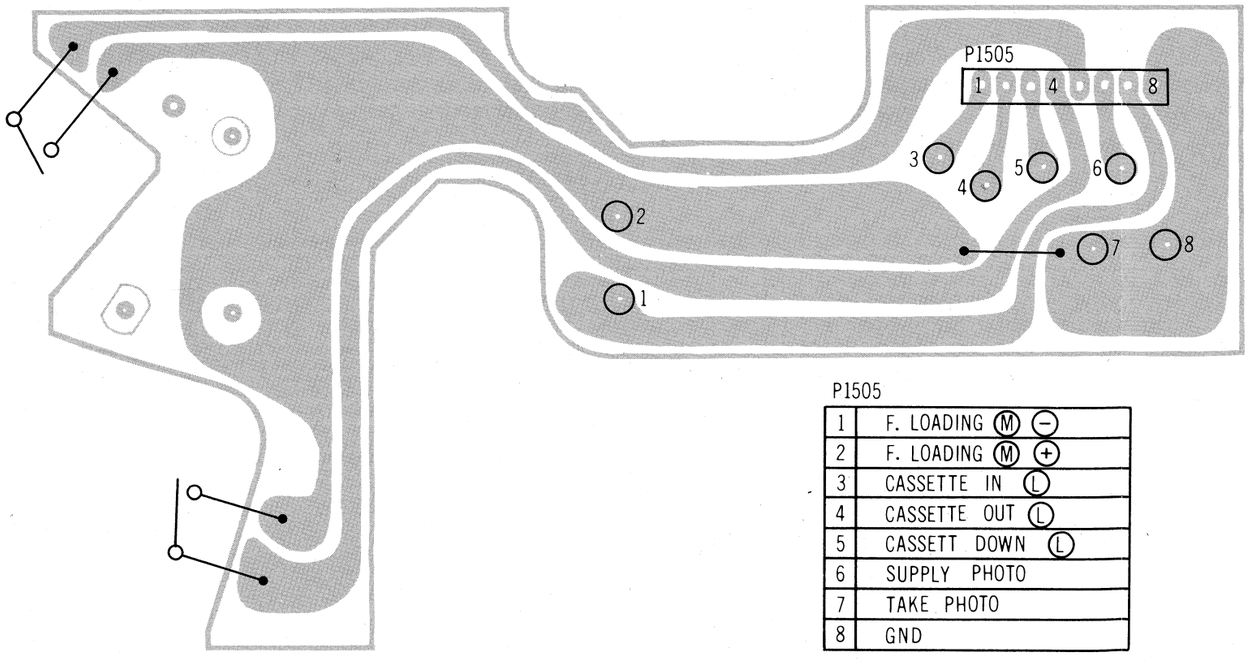

P1505

1	F. LOADING Ⓜ ⊖
2	F. LOADING Ⓜ ⊕
3	CASSETTE IN Ⓛ
4	CASSETTE OUT Ⓛ
5	CASSETT DOWN Ⓛ
6	SUPPLY PHOTO
7	TAKE PHOTO
8	GND

REEL

B. (VJB00971)

BP 1503

1	UNREG 14V
2	GND
3	+6V

BP 1504

1	9V
2	5V
3	POWER OFF Ⓛ
4	UNREG 14V
5	GND

MOTOR CONNECTION P.C.B. (VJB00968)

P003

1	AC 17V
2	AC 17V

P1522

1	AC 17V
2	AC 17V

P1520

1	LED ⊕
2	GND (LED)
3	Vcc (+9V)
4	GND
5	T_2
6	T_1
7	S_1
8	——

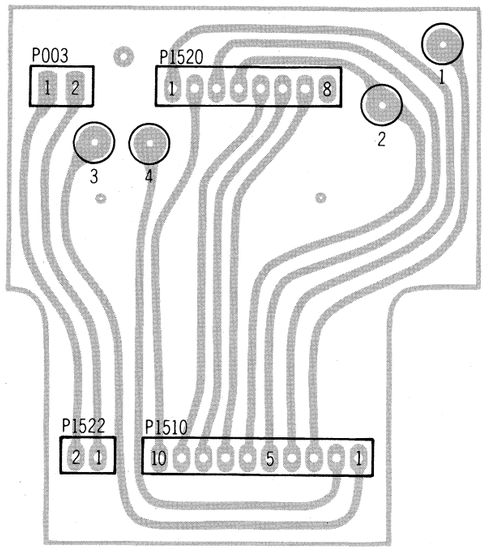

P1510

1	LOD Ⓜ ⊖
2	LOD Ⓜ ⊕
3	DEW SNS
4	SNS LED
5	+9V
6	GND
7	PEEL SUP1
8	PEEL KAC1
9	PEEL KAC2
10	GND (LED)

3	LOD Ⓜ ⊖	①
4	LOD Ⓜ ⊕	②

1	DEW SNS	①
2	GND	②

REEL SENSOR P.C.B. (VJB00970)

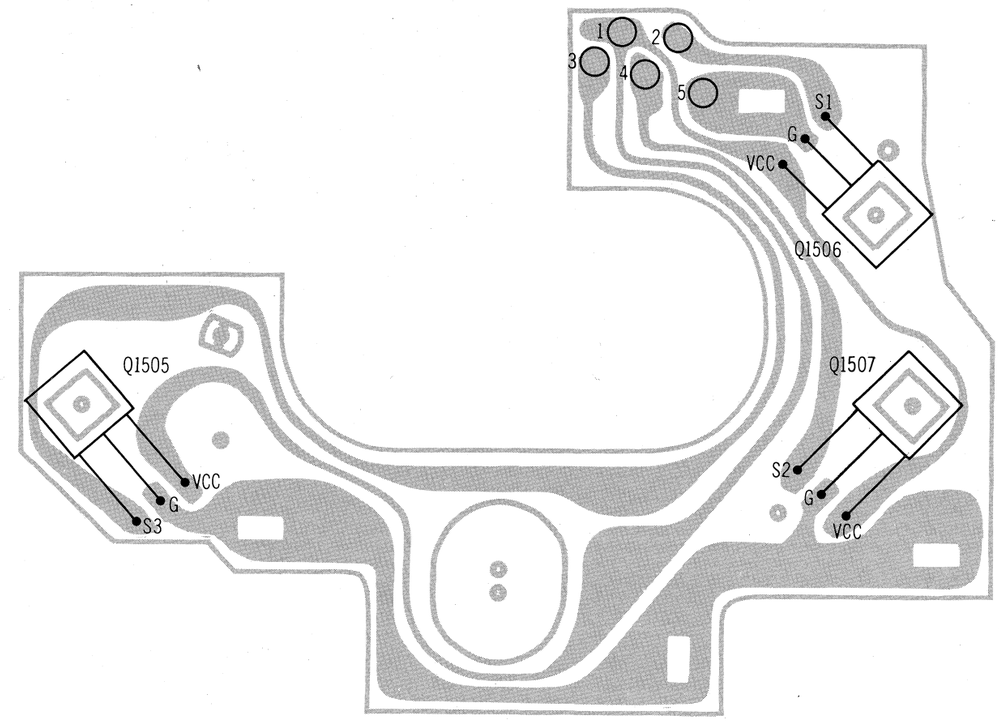

FRONT LOADING MOTOR CONNECTION P.C.B. (VJB00969)

SENSOR P.C.B.

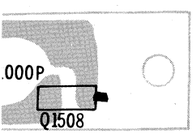

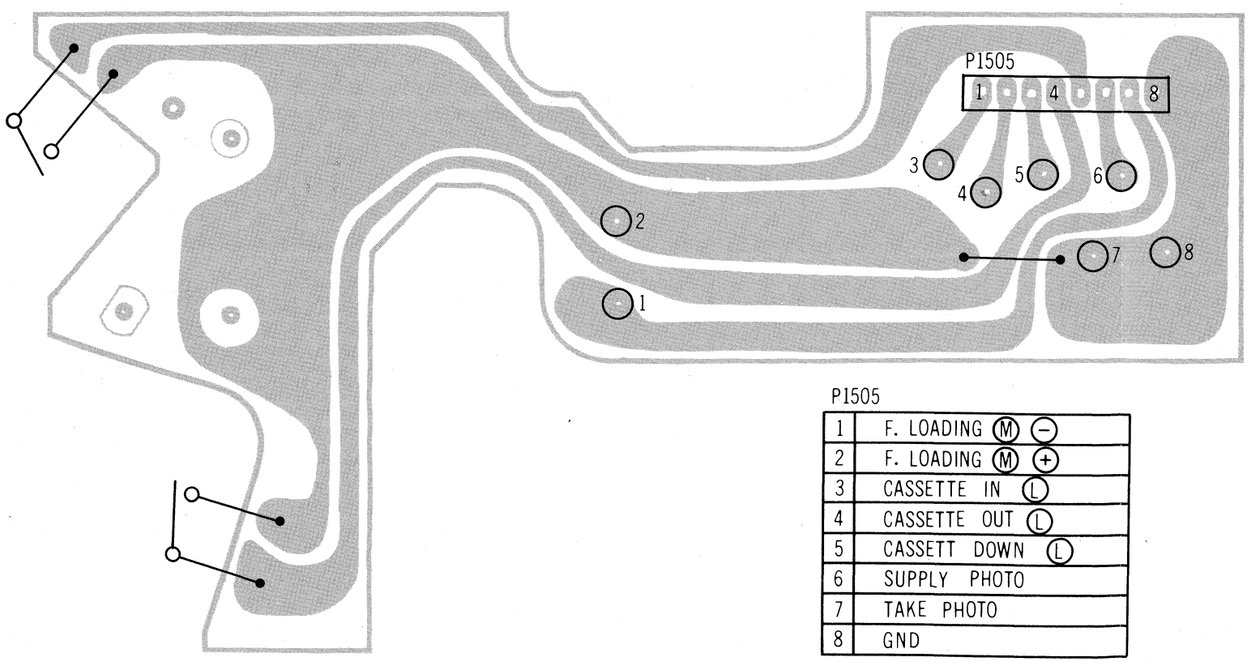

P1505

1	F. LOADING Ⓜ ⊖
2	F. LOADING Ⓜ ⊕
3	CASSETTE IN Ⓛ
4	CASSETTE OUT Ⓛ
5	CASSETT DOWN Ⓛ
6	SUPPLY PHOTO
7	TAKE PHOTO
8	GND

A/C HEAD P.C.B.

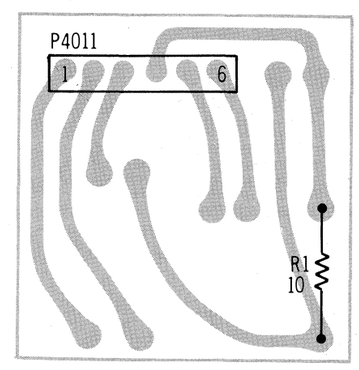

P4011

1	CTL HEAD (−)	P2006 - 1
2	CTL HEAD (+)	P2006 - 2
3	AUDIO H. (R)	P4002 - 1
4	AUDIO H. (W)	P4002 - 3
5	AE HEAD (+)	P4002 - 5
6	AE HEAD (−)	P4002 - 4

A.C. BOARD (VEP01108A)

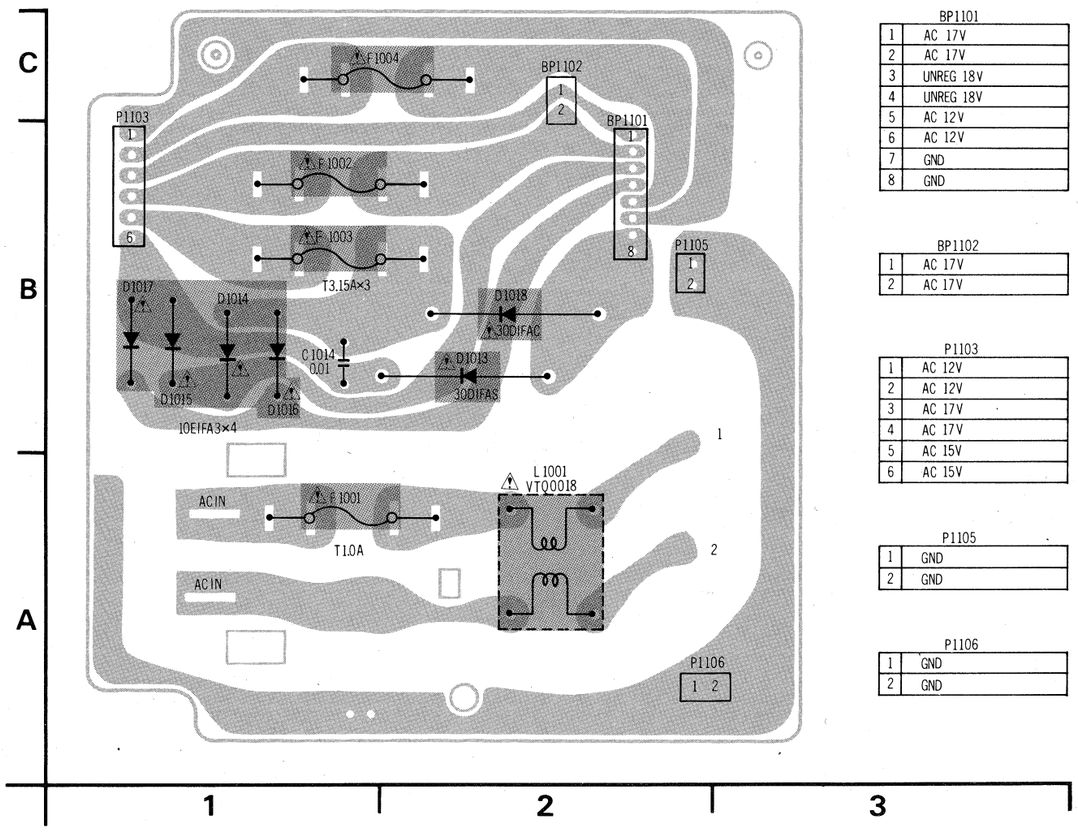

BP1101	
1	AC 17V
2	AC 17V
3	UNREG 18V
4	UNREG 18V
5	AC 12V
6	AC 12V
7	GND
8	GND

BP1102	
1	AC 17V
2	AC 17V

P1103	
1	AC 12V
2	AC 12V
3	AC 17V
4	AC 17V
5	AC 15V
6	AC 15V

P1105	
1	GND
2	GND

P1106	
1	GND
2	GND

A.C. & POWER SUPPLY SCHEMATIC DIAGRAM

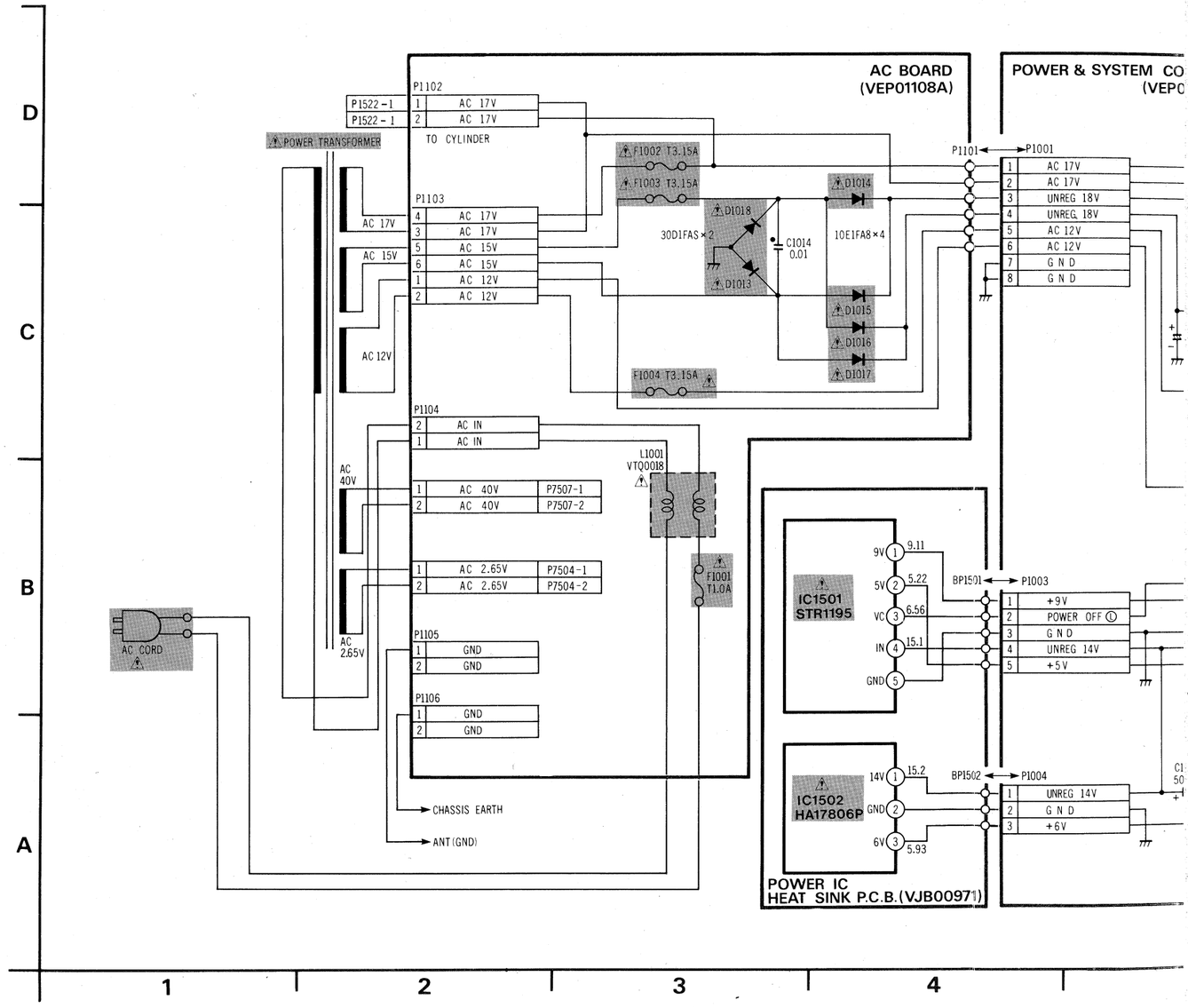

A.C. & POWER SUPPLY SCHEMATIC DIAGRAM

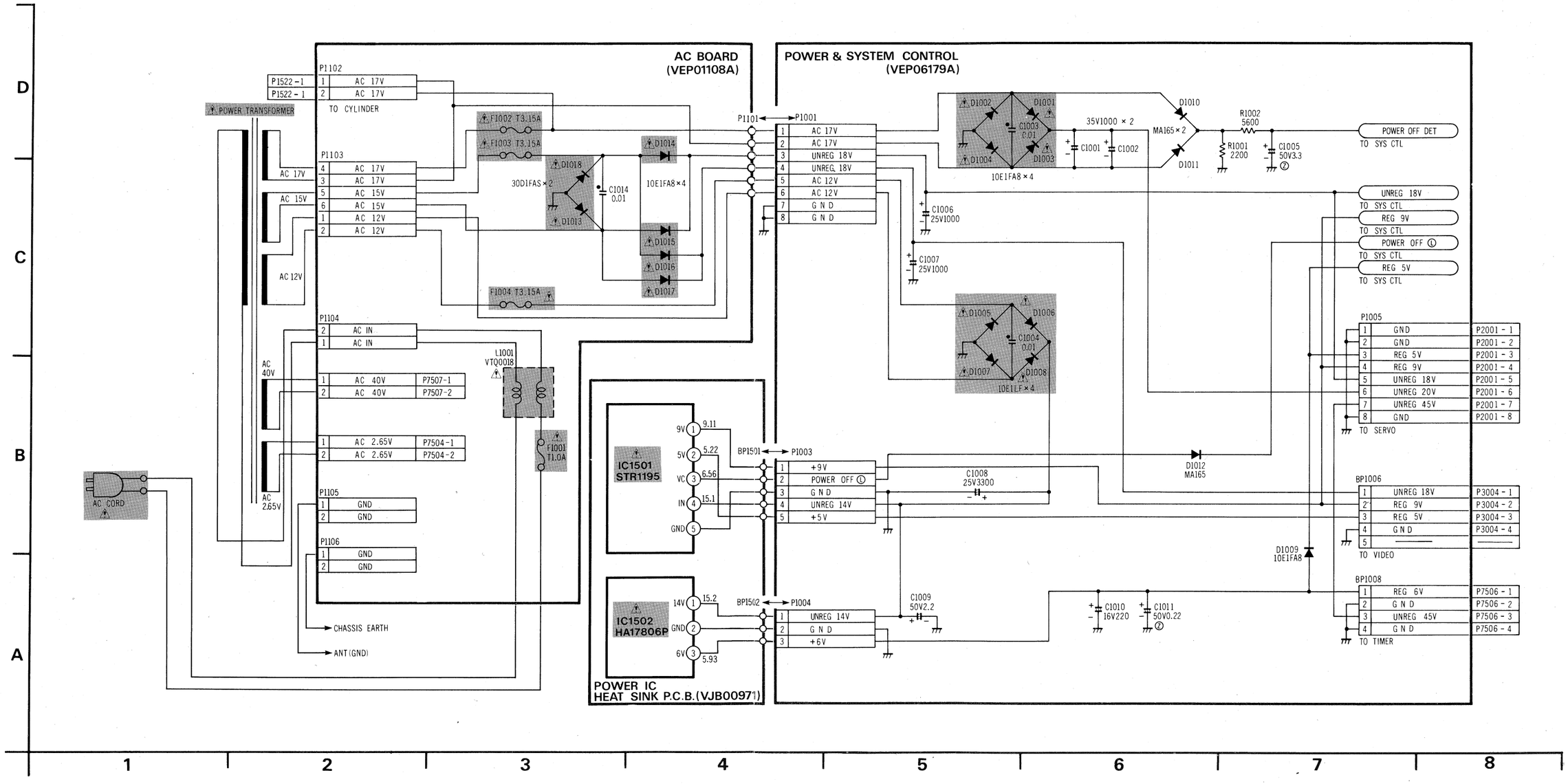

POWER SUPPLY & SYSTEM CONTROL BOARD (VEP06179A)

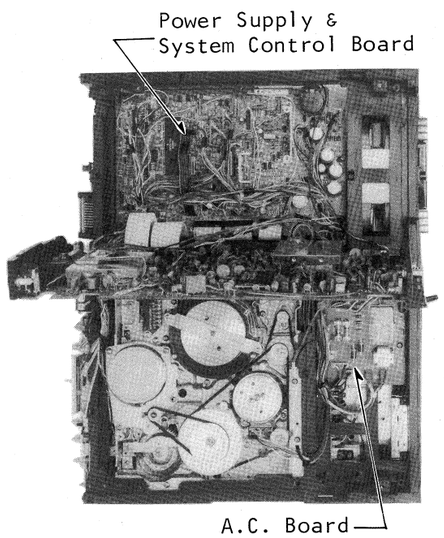

System Control C.B.A	
Q6001	B-5
Q6004	B-5
Q6005	D-3
Q6006	C-3
Q6007	C-3
Q6008	C-3
Q6009	B-5
Q6010	B-6
Q6011	D-5
Q6012	B-4
Q6013	E-5
Q6014	E-5
Q6015	D-3
Q6016	C-5
Q6017	C-5
Q6019	D-3
Q6020	D-3
Q6021	D-5
Q6022	B-4
Q6023	B-5
Q6024	C-5
Q6025	C-5
Q6026	B-5
Q6027	B-4
Q6028	C-5
Q6029	D-5
Q6030	B-7
Q6031	B-7
Q6032	B-7
Q6033	B-7
Q6034	B-7
Q6035	B-7
Q6036	B-7
Q6037	B-6
Q6038	B-6
Q6039	B-6
Q6040	C-7
Q6041	C-7
Q6042	D-7
Q6043	D-7
Q6044	C-3
Q6045	D-4
Q6046	B-3
Q6047	E-6
Q6048	E-6
Q6051	C-3
IC6001	C-6
IC6002	D-4
IC6003	D-3
IC6004	C-4
IC6005	C-4
IC6006	B-3
IC6007	C-5

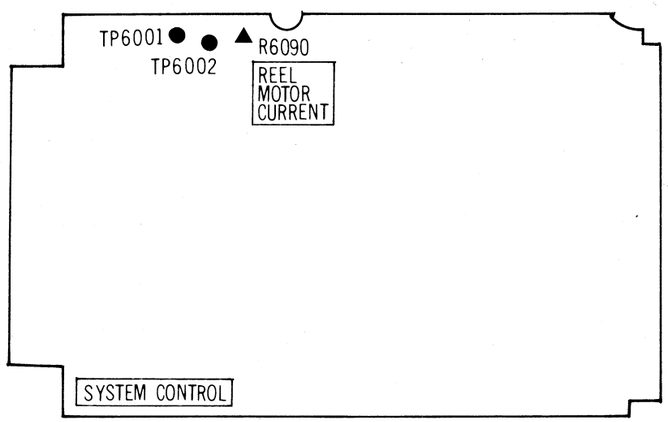

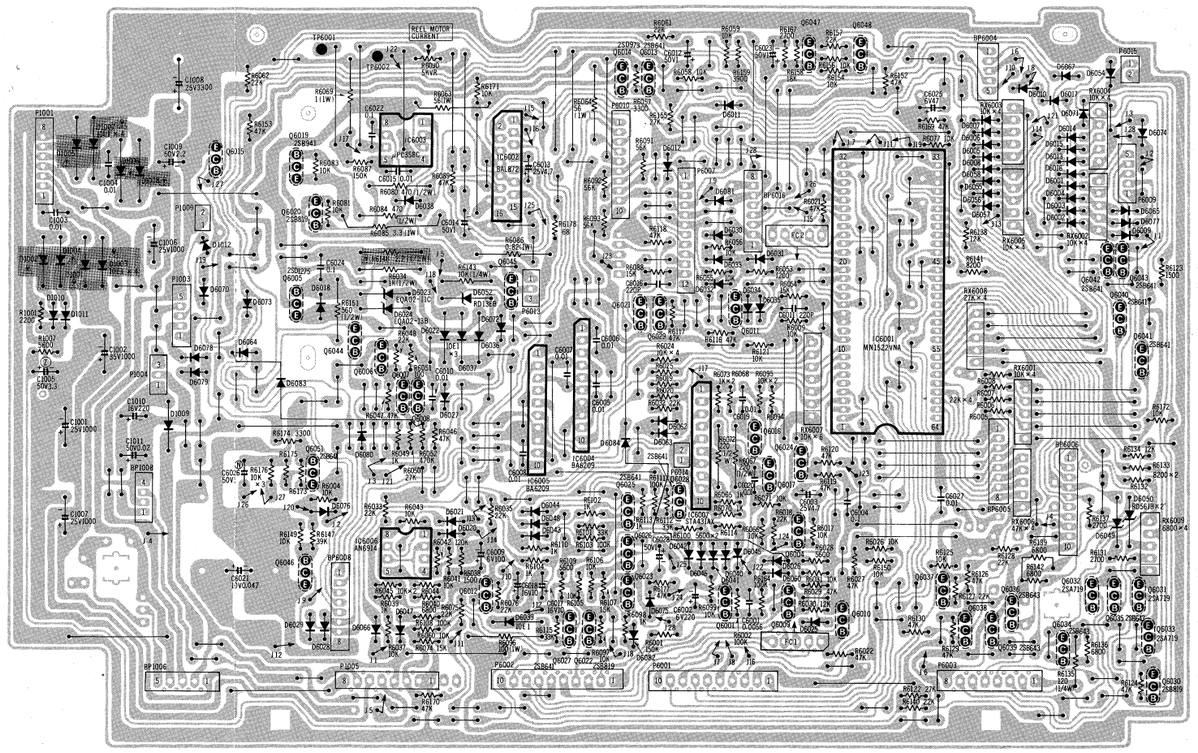

P6010

1	LOADING Ⓜ ⊖
2	LOADING Ⓜ ⊕
3	DEW SENSER
4	SNS. LED
5	REG 3V
6	GND
7	REEL SUPPLY
8	REEL TAKE 1
9	REEL TAKE 2
10	GND (TO LED)

P1001

1	AC 17V
2	AC 17V
3	UN REG 18V
4	UN REG 18V
5	AC 12V
6	AC 12V
7	GND
8	GND

P6013

1	REEL TR. B
2	REEL TR. C
3	REEL TR. E

P1003

1	REG 9V
2	REG 5V
3	POWER OFF Ⓛ
4	UNREG 14V
5	GND

P1004

1	UNREG 14V
2	GND
3	REG 6V

P1009

1	GND
2	GND

BP1008

1	REG 6V
2	GND
3	UNREG 45V
4	GND

P6014

1	REEL Ⓜ ⊕
2	REEL Ⓜ ⊖

BP1006

1	UNREG 18V
2	REG 9V
3	REG 5V
4	GND
5	———

BP6008

1	F.LOADING Ⓜ ⊖
2	F.LOADING Ⓜ ⊕
3	CASSETTE IN Ⓛ
4	CASSETTE OUT Ⓛ
5	CASSETTE DOWN Ⓛ
6	SUPPLY PHOTO
7	TAKE UP PHOTO
8	GND

P1005

1	GND
2	GND
3	REG 5V
4	REG 9V
5	UNREG 18V
6	UNREG 20V
7	UNREG 45V
8	GND

P6002

1	CYLINDER ON Ⓗ
2	CYLINDER LOCK Ⓛ
3	CAPSTAN ON Ⓛ
4	POWER STOP Ⓗ
5	CAPSTAN REV. Ⓗ
6	PAUSE Ⓗ
7	SPEED 2³
8	SPEED 2⁰
9	REVERSE PLAY Ⓛ
10	PAUSE RESET Ⓗ

P6001

1	4.43MHz
2	GND
3	RESET Ⓛ
4	REEL Ⓜ CTL.
5	CAPSTAN TURN OVER
6	SLOW Ⓗ
7	STILL Ⓗ
8	F.ADV/SLOW Ⓗ
9	ENV. SELECT Ⓗ
10	PAUSE RESET Ⓗ

P6003

1	EE 9V
2	CAMERA PAUSE Ⓛ
3	D.REC 9V
4	REC 9V
5	AUDIO MUTE
6	A-D 9V
7	A.D & D.REC 9V
8	VTR 9V

UNLESS OTHERWISE SPECIFIED, ALL Tr's ARE 2SD636
ALL DIODES ARE MA165

BP6004

1	POWER ON/OFF
2	———
3	———
4	———
5	REVERSE PLAY Ⓛ

P6015

1	SAFETY TAB Ⓛ
2	GND

P6009

1	EJECT POS Ⓛ
2	STOP POS Ⓛ
3	FF/REW POS Ⓛ
4	2MODE POS Ⓛ
5	PLAY POS Ⓛ

BP6016

1	S.CK
2	S.DATA
3	POWER ON Ⓗ
4	POWER ON Ⓛ
5	POWER OUT
6	TIMER SET ON Ⓛ
7	REG +5V
8	EJECT POS Ⓛ

P6007

1	REEL SUP
2	REEL TAK 1
3	REEL TAK 2
4	SLOW Ⓗ
5	S.CK
6	S.DATA
7	COUNTER. Z. Ⓗ
8	CASSETTE. D. Ⓛ
9	RESET Ⓗ
10	DEW Ⓛ
11	SIN/OUT
12	SCK

BP6005

1	PØØ
2	PØ1
3	PØ2
4	PØ3
5	PDØ
6	PD1
7	PD2
8	PD3

BP6006

1	REW Ⓛ
2	FF Ⓛ
3	PLAY Ⓛ
4	REC Ⓛ
5	A·DUB Ⓛ
6	PAUSE Ⓛ
7	SLOW Ⓛ
8	SW REG 5V
9	REG 5V
10	GND

SYSTEM CONTROL TRANSISTORs VOLTAGE CHART

REF. NO.	Q6001			Q6002			Q6003			Q6004			Q6005			Q6006		
MODE	E	C	B	E	C	B	E	C	B	E	C	B	E	C	B	E	C	B
STOP	0	0.03	0.61							0	4.40	0	10.3	22.3	11.5	0	5.10	0.19
PLAY	0	0.07	0.58							0	4.38	0	10.3	20.4	11.5	0	5.10	0.19
REC	0	0.09	0.58							0	5.09	-0.19	10.3	20.0	11.5	0	5.10	0.19
F.F	0	0.03	0.59							0	4.38	0	11.9	20.5	13.1	0	5.10	0.19
REW	0	0.03	0.59							0	4.38	0	11.9	20.6	13.1	0	5.10	0.19

REF. NO.	Q6007			Q6008			Q6009			Q6010			Q6011			Q6012		
MODE	E	C	B	E	C	B	E	C	B	E	C	B	E	C	B	E	C	B
STOP	0.56	0.61	1.23	0.56	1.23	0.37	0	0.03	0.61	0	5.09	0.03	0	0.85	0.20	0	4.54	0
PLAY	0.56	0.61	1.23	0.56	1.23	0.37	0	4.63	0.12	0	0.01	0.62	0	—	0.17	0	4.54	0
REC	0.56	0.61	1.23	0.56	1.23	0.37	0	4.64	0.12	0	0.01	0.62	0	—	0.20	0	4.54	0
F.F	0.56	0.61	1.23	0.56	1.23	0.37	0	0.03	0.59	0	5.09	0.03	0	—	0.17	0	4.54	0
REW	0.56	0.61	1.23	0.56	1.23	0.37	0	0.03	0.59	0	5.09	0.03	0	—	0.17	0	4.54	0

REF. NO.	Q6013			Q6014			Q6015			Q6016			Q6017			Q6018		
MODE	E	C	B	E	C	B	E	C	B	E	C	B	E	C	B	E	C	B
STOP	9.09	−0.44	9.08	−0.67	21.7	−0.44	0	11.3	0.02	0	0.11	0.03	0	0.11	0.04			
PLAY	9.09	−0.60	9.08	−0.30	20.6	−0.60	0	11.3	0.02	0.86	0.94	1.53	0.17	2.93	0.04			
REC	9.09	−0.51	9.08	−0.50	20.3	−0.51	0	11.3	0.02	0.87	0.95	1.53	0.17	2.93	0.04			
F.F	9.09	—	9.01	1.72	19.9	—	0	12.8	0.02	0.84	1.81	1.53	0.11	8.33	0.03			
REW	9.09	—	9.01	1.70	20.1	—	0	12.8	0.02	0.11	8.32	0.03	0.84	2.26	1.53			

REF. NO.	Q6019			Q6020			Q6021			Q6022			Q6023			Q6024		
MODE	E	C	B	E	C	B	E	C	B	E	C	B	E	C	B	E	C	B
STOP	0	−0.23	0	0.01	0.01	0	0	0.86	8.55	8.55	−0.28	14.6	0	15.2	0	0	0	0.60
PLAY	4.32	3.81	3.65	4.41	4.32	3.68	0	—	—	8.53	−0.31	13.8	0	14.4	0	0	0	0.60
REC	4.35	3.77	3.65	4.41	4.32	3.68	0	—	—	8.53	−0.35	13.8	0	14.4	0	0	0	0.60
F.F	9.16	9.12	8.43	9.21	9.18	8.51	0	—	—	8.33	−0.14	13.8	0	14.4	0	0	0	0.60
REW	9.04	9.01	8.33	9.12	9.07	8.39	0	—	—	8.33	−0.14	13.8	0	14.4	0	0	0	0.60

REF. NO.	Q6025			Q6026			Q6027			Q6028			Q6029			Q6030		
MODE	E	C	B	E	C	B	E	C	B	E	C	B	E	C	B	E	C	B
STOP	8.53	−0.44	8.50	0	0	0.68	8.56	−0.57	8.51	8.56	−0.92	8.53	0	0.21	0.57	9.08	9.08	8.39
PLAY	8.53	−0.62	8.50	0	0	0.68	8.53	−0.65	8.51	8.53	−0.89	8.50	0	0.21	0.57	9.08	9.08	8.40
REC	8.53	−0.79	8.50	0	0	0.68	8.53	−0.71	8.50	8.53	−0.89	8.50	0	0.21	0.57	9.08	9.02	8.35
F.F	8.33	−0.64	8.30	0	0	0.68	8.33	8.28	7.67	8.33	−0.92	8.30	0	0.21	0.57	9.08	9.08	8.39
REW	8.33	−0.67	8.30	0	0	0.68	8.33	8.28	7.67	8.33	−0.92	8.30	0	0.21	0.57	9.08	9.08	8.39

REF. NO.	Q6031			Q6032			Q6033			Q6034			Q6035			Q6036		
MODE	E	C	B	E	C	B	E	C	B	E	C	B	E	C	B	E	C	B
STOP	9.07	0.50	9.08	9.08	0	9.07	9.07	0.23	9.07	9.08	9.07	8.41	9.08	0	9.08	9.08	0	9.08
PLAY	9.07	0.46	9.07	9.08	0	9.07	9.07	0.18	9.07	9.08	−0.55	9.08	9.07	0	9.07	9.08	0	9.08
REC	9.02	8.94	8.37	9.02	8.70	8.29	9.02	8.92	8.31	9.08	9.06	8.41	9.02	0	9.01	9.08	0	9.06
F.F	9.07	0.50	9.07	9.07	0	9.07	9.07	0.18	9.07	9.08	9.07	8.41	9.07	0	9.07	9.08	0	9.08
REW	9.07	0.50	9.07	9.07	0	9.07	9.07	0.18	9.07	9.08	9.07	8.41	9.07	0	9.07	9.08	0	9.08

REF. NO.	Q6037			Q6038			Q6039			Q6040			Q6041			Q6042		
MODE	E	C	B	E	C	B	E	C	B	E	C	B	E	C	B	E	C	B
STOP	0	0.01	0.61	0	5.10	0.05	9.08	0.02	9.08	5.10	0.04	5.00	5.10	−0.70	5.06	5.11	−1.40	5.07
PLAY	0	0.01	0.61	0	5.10	0.05	9.08	9.07	8.44	5.10	0.02	5.00	5.10	−0.50	5.07	5.11	−0.44	5.07
REC	0	0.01	0.61	0	5.10	0.05	9.07	0.02	9.08	5.10	−0.39	5.00	5.10	−1.50	5.07	5.11	−0.49	5.07
F.F	0	0.01	0.61	0	5.10	0.05	9.07	9.07	8.44	5.10	−0.39	5.00	5.10	−0.60	5.07	5.11	−0.45	5.07
REW	0	0.01	0.61	0	5.10	0.05	9.07	9.07	8.44	5.10	−0.39	5.00	5.10	−1.13	5.07	5.11	−0.90	5.07

REF. NO.	Q6043			Q6044			Q6045			Q6046			Q6047			Q6048		
MODE	E	C	B	E	C	B	E	C	B	E	C	B	E	C	B	E	C	B
STOP	5.10	−0.70	5.07	0	0.12	0.69	15.0	22.3	15.9	−0.26	0	0	0	2.93	−0.01	0.12	0.12	0.75
PLAY	5.10	0	5.07	0	0.09	0.67	14.3	20.5	15.0	−0.27	−0.02	0	0	2.93	−0.01	0.12	0.12	0.75
REC	5.10	0.02	5.07	0	0.10	0.67	14.3	20.5	15.0	−0.25	0	0	0	2.93	−0.01	0.12	0.12	0.75
F.F	5.10	−1.20	5.07	0	2.60	0.21	14.3	20.5	15.0	−0.24	−0.01	0	0	2.93	−0.02	0.12	0.12	0.75
REW	5.10	−0.51	5.07	0	2.22	0.21	14.3	20.5	15.0	−0.25	0	0	0	2.93	−0.02	0.12	0.12	0.75

REF. NO.	Q6051		
MODE	E	C	B
STOP	5.10	0.02	5.10
PLAY	5.10	0.02	5.10
REC	5.10	0.02	5.10
F.F	5.10	0.02	5.10
REW	5.10	0.02	5.10

SYSTEM CONTROL ICs VOLTAGE CHART

REF. NO.	IC6001																			
MODE	1	2	3	4	5	6	7	8	9	10	11	12	13	14	15	16	17	18	19	20
STOP	0	4.77	4.99	4.99	4.99	5.00	0.09	0.09	0.09	0.10	0.28	3.13	5.03	5.03	4.47	0.87	4.39	0.10	0.10	0.10
PLAY	0	4.47	0	4.99	4.99	5.00	0.09	3.90	0.09	0.10	0.22	3.13	5.03	5.03	4.47	4.54	4.39	0.10	0.10	0.10
REC	0	4.47	4.99	4.99	4.99	5.00	0.09	3.90	0.09	0.10	0.24	3.13	5.03	5.03	4.47	—	4.39	0.10	0.10	0.10
F.F	0	4.47	4.99	4.99	4.99	5.00	0.09	3.90	0.09	0.10	0.20	3 13	5.03	5.03	4.47	—	4.39	0.10	0.10	0.10
REW	0	4.47	0	4.99	4.99	5.00	3.94	0.09	0.09	0.10	0.22	3.13	5.03	5.03	4.47	—	4.39	0.10	0.10	0.10

REF. NO.	IC6001																			
MODE	21	22	23	24	25	26	27	28	29	30	31	32	33	34	35	36	37	38	39	40
STOP	3.18	0	5.02	0.07	0.06	0.06	0.08	0.06	5.08	4.47	0.06	0.11	5.11	0.05	0.07	0.07	4.74	4.64	3.81	0.12
PLAY	0.06	0	5.02	0.06	0.06	0.06	4.56	0.06	0.05	4.47	0.06	0.11	5.11	0.05	0.07	0.07	—	—	3.79	9.07
REC	0.06	0	5.02	0.06	0.06	0.06	4.56	0.06	0.05	4.47	0.06	0.11	5.11	0.05	0.07	0.07	—	—	3.83	0.12
F.F	1.15	0	5.02	0.06	0.06	5.02	0.08	0.06	0.05	4.47	0.06	0.11	5.11	5.10	0.07	0.07	0.06	2.32	2.27	4.04
REW	1.15	0	5.02	0.06	0.06	5.02	0.08	0.06	0.05	4.47	0.06	0.11	5.11	0.05	0.07	0.07	2.31	2.27	4.10	0.11

REF. NO.	IC6001																			
MODE	41	42	43	44	45	46	47	48	49	50	51	52	53	54	55	56	57	58	59	60
STOP	9.06	9.06	9.06	0.04	0.07	9.07	0.06	3.94	0.02	3.93	4.84	4.60	4.41	4.41	0.11	0.09	0.41	0.38	5.05	5.05
PLAY	9.06	9.06	0.08	0.04	0.07	9.07	0.06	3.94	0.64	3.93	0.37	4.60	4.41	4.41	0	0.09	0.41	0.38	5.05	5.05
REC	0.10	0.09	9.06	0.04	0.07	9.07	0.06	3.94	0.74	3.93	0.37	0.36	4.35	4.41	0	0.09	0.41	0.38	5.05	5.05
F.F	0.10	9.06	9.06	0.08	0.03	0.06	8.07	0.05	1.19	0.67	0.33	4.82	4.59	4.41	4.41	0.09	0.06	0.38	0.38	5.05
REW	9.06	9.06	9.06	0.02	0.07	8.08	0.06	0.33	7.72	1.21	4.82	4.60	4.41	4.41	0	0.06	0.41	0.38	5.05	5.05

REF. NO.	IC6001																			
MODE	61	62	63	64																
STOP	5.05	5.05	0.36	0.36																
PLAY	5.05	5.04	0.36	—																
REC	5.05	5.05	0.36	1.49																
F.F	5.05	5.04	0.36	0.36																
REW	5.05	5.04	0.36	1.36																

REF. NO.	IC6002																			
MODE	1	2	3	4	5	6	7	8	9	10	11	12	13	14	15	16				
STOP	3.97	0.06	0.07	0.06	8.44	8.43	−0.21	0	0	0	0	0	0.97	5.10	0	15.0				
PLAY	3.97	0.06	4.56	0.06	8.44	8.43	—	4.40	4.56	0.19	0.19	3.05	3.67	5.10	0	14.5				
REC	3.97	0.06	4.56	0.06	8.40	8.43	—	4.40	4.56	0.19	0.19	3.05	3.67	5.10	0	14.2				
F.F	3.97	5.02	0.07	0	8.22	8.22	0.02	9.65	9.38	0.50	0.50	0.53	0.96	5.10	0	14.5				
REW	3.97	5.02	0.07	0.06	8.22	8.22	0.02	9.88	10.3	0.57	0.50	0.53	0.96	5.10	0	14.5				

REF. NO.	IC6003										IC6004									
MODE	1	2	3	4	5	6	7	8			1	2	3	4	5	6	7	8	9	10
STOP	0.30	0	0	0	0	0.04	0	21.8			0	0.50	0.88	0.93	0.08	0.09	10.3	10.3	0.89	0.50
PLAY	5.19	4.42	4.40	0	0.17	0.17	2.42	20.5			0	0.50	0.88	0.84	0.08	0.09	10.3	10.3	0.89	0.50
REC	5.19	4.42	4.40	0	0.17	0.17	2.42	20.3			0	0.50	0.88	0.94	0.08	0.09	10.3	10.3	0.89	0.50
F.F	9.96	9.21	9.18	0	0.12	0.03	19.7	21.0			0	0.50	0.88	0.92	0.22	0.09	11.9	11.9	0.89	0.50
REW	9.85	9.09	9.06	0	0.12	0.03	19.7	21.0			0	0.50	0.88	0.87	0.22	0.09	11.9	11.9	0.89	0.50

REF. NO.	IC6005												IC6006							
MODE	1	2	3	4	5	6	7	8	9	10			1	2	3	4	5	6	7	8
STOP	0	0.51	0.86	0.93	0.10	0.10	10.3	10.3	0.92	0.51			5.11	2.87	3.03	0	3.03	2.87	5.10	5.11
PLAY	0	0.51	0.86	0.85	0.10	0.10	10.3	10.3	0.92	0.51			5.11	2.87	3.03	0	3.03	2.87	5.10	5.11
REC	0	0.51	0.86	0.97	0.10	0.10	10.3	10.3	0.92	0.51			5.11	2.87	3.03	0	3.03	2.87	5.10	5.11
F.F	0	0.51	0.86	0.93	0.10	0.10	11.9	11.9	0.92	0.51			5.11	2.87	3.03	0	3.03	2.87	5.10	5.11
REW	0	0.51	0.86	0.87	0.10	0.10	11.9	11.9	0.92	0.51			5.11	2.87	3.03	0	3.03	2.87	5.10	5.11

REF. NO.	IC6007									
MODE	1	2	3	4	5	6	7	8	9	10
STOP	0	0	0.16	0	0.16	0.12	0.16	0.12	0.16	0.12
PLAY	0.17	0.86	0.24	0.17	2.79	2.20	2.79	2.91	0.24	2.91
REC	0.17	0.86	0.24	0.17	2.79	2.20	2.79	2.91	0.24	2.91
F.F	0.11	0.84	0.14	0.11	8.27	7.61	8.29	8.36	0.14	8.35
REW	0.13	0.13	8.47	0.86	0.17	8.62	0.18	7.97	8.70	8.89

MICRO PROCESSOR (IC6001: MN1522VNA) MODE BY MODE TIMING CHART

1.SYNC AND SCAN PULSES.

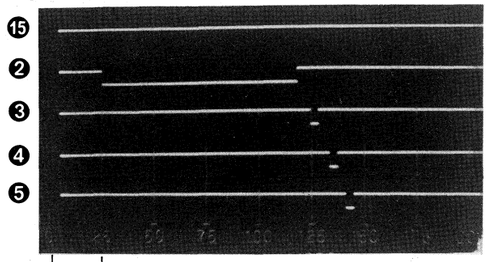

2.STOP → EJECT.

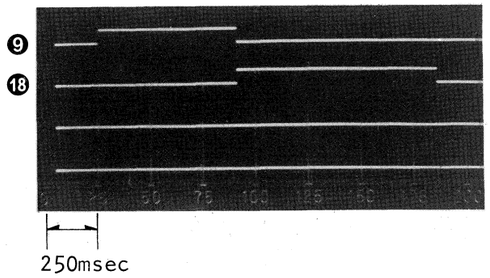

3.STOP → FF.

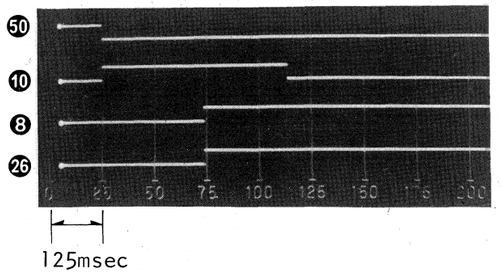

4.STOP → REW.

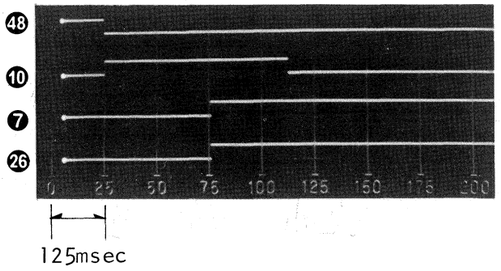

5.STOP → PLAY.

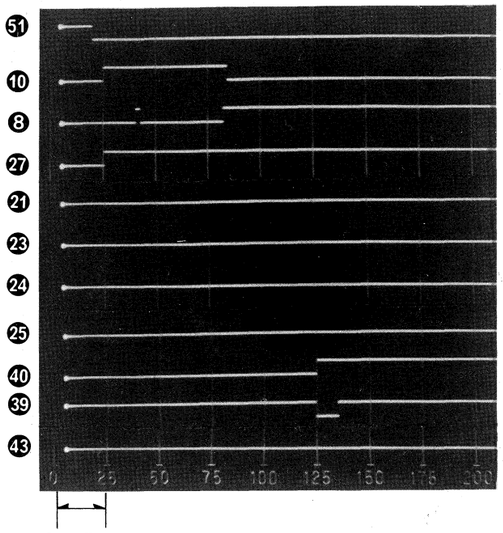

6.PLAY → CUE.

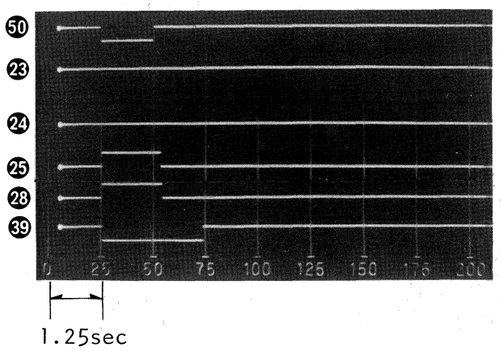

7.PLAY → REVIEW.

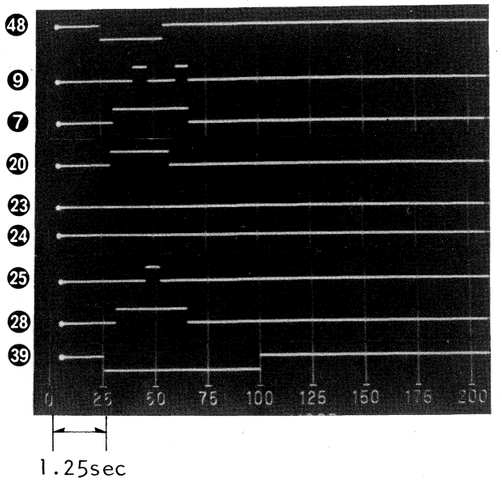

System Control			
Q6001	F-3	IC6001	F-8
Q6004	D-16	IC6002	F-11
Q6005	B-4	IC6003	E-13
Q6006	C-15	IC6004	C-3
Q6007	C-15	IC6005	C-5
Q6008	C-15	IC6006	C-14
Q6009	B-11	IC6007	G-15
Q6010	B-11		
Q6011	G-9		
Q6012	D-9		
Q6013	G-11		
Q6014	G-12		
Q6015	F-9		
Q6016	G-14		
Q6017	F-15		
Q6019	E-12		
Q6020	F-12		
Q6021	A-18		
Q6022	D-11		
Q6023	D-11		
Q6025	D-11		
Q6026	D-10		
Q6027	D-12		
Q6028	D-12		
Q6029	C-18		
Q6030	F-17		
Q6031	E-18		
Q6032	E-17		
Q6033	E-18		
Q6034	D-17		
Q6035	E-18		
Q6036	D-17		
Q6037	D-14		
Q6038	D-14		
Q6039	D-18		
Q6040	G-3		
Q6041	F-3		
Q6042	F-3		
Q6043	F-3		
Q6044	B-4		
Q6045	G-18		
Q6046	F-3		
Q6047	G-12		
Q6048	G-13		
Q6051	G-10		

SYSTEM CONTROL SCHEMATIC I

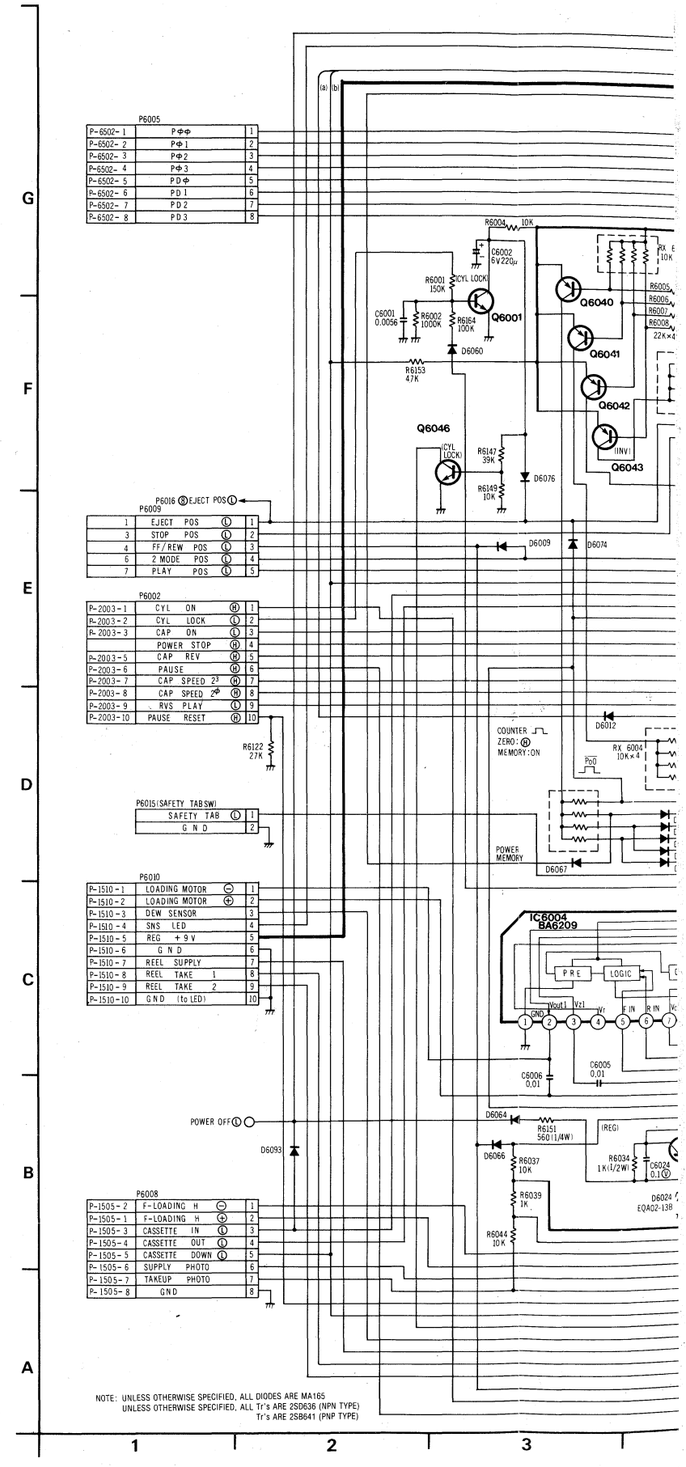

SYSTEM CONTROL SCHEMATIC DIAGRAM

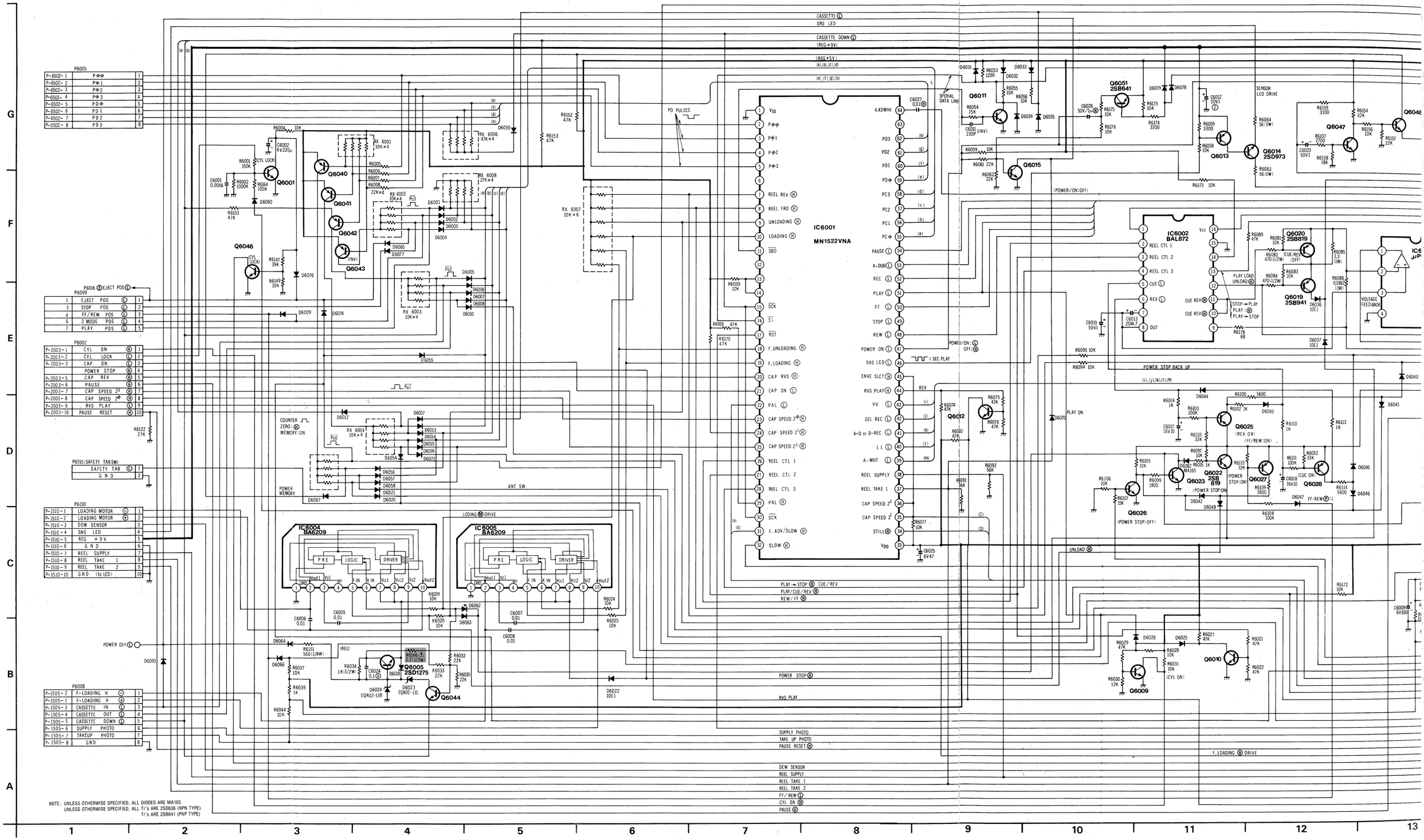

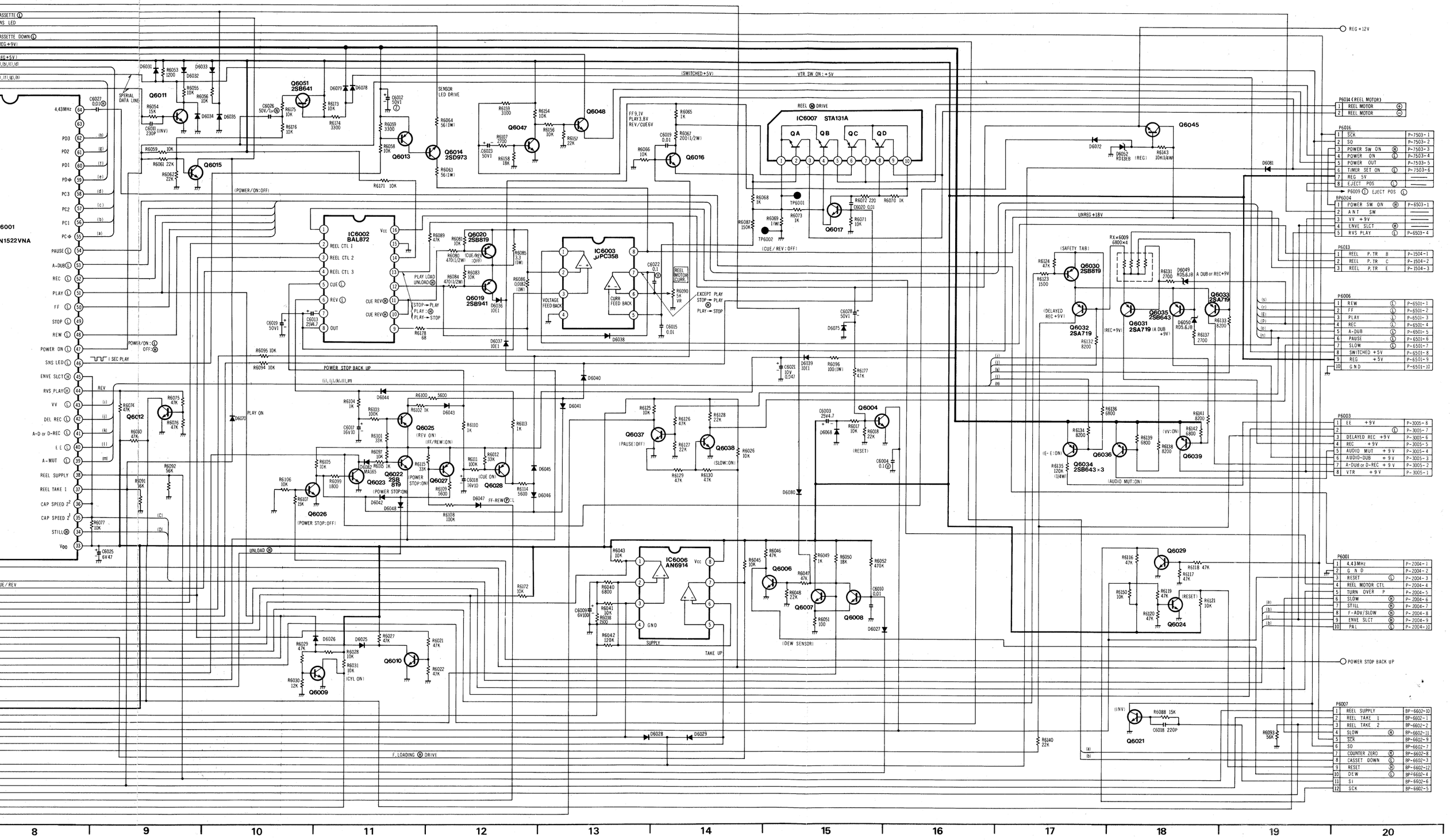

P6014 (REEL MOTOR)		
1	REEL MOTOR	⊕
2	REEL MOTOR	⊖

P6016			
1	SCK		P-7503-1
2	SO		P-7503-2
3	POWER SW ON	H	P-7503-3
4	POWER ON	L	P-7503-4
5	POWER OUT		P-7503-5
6	TIMER SET ON	L	P-7503-6
7	REG 5V		——
8	EJECT POS	L	——

P6009 ① EJECT POS Ⓛ

BP6004			
1	POWER SW ON	H	P-6503-1
2	A N T SW		——
3	VV +9V		——
4	ENVE SLCT	H	——
5	RVS PLAY	L	P-6503-4

P6013			
1	REEL P.TR B		P-1504-1
2	REEL P.TR C		P-1504-2
3	REEL P.TR E		P-1504-3

P6006			
1	REW	L	P-6501-1
2	FF	L	P-6501-2
3	PLAY	L	P-6501-3
4	REC	L	P-6501-4
5	A-DUB	L	P-6501-5
6	PAUSE	L	P-6501-6
7	SLOW	L	P-6501-7
8	SWITCHED +5V		P-6501-8
9	REG +5V		P-6501-9
10	G N D		P-6501-10

P6003			
1	EE +9V		P-3005-8
2		L	P-3005-7
3	DELAYED REC +9V		P-3005-6
4	REC +9V		P-3005-5
5	AUDIO MUT +9V		P-3005-4
6	AUDIO-DUB +9V		P-3005-3
7	A-DUB or D-REC +9V		P-3005-2
8	VTR +9V		P-3005-1

P6001			
1	4.43MHz		P-2004-1
2	G N D		P-2004-2
3	RESET	L	P-2004-3
4	REEL MOTOR CTL		P-2004-4
5	TURN OVER P		P-2004-5
6	SLOW	H	P-2004-6
7	STILL	H	P-2004-7
8	F-ADV/SLOW	H	P-2004-8
9	ENVE SLCT	H	P-2004-9
10	PAL	L	P-2004-10

P6007			
1	REEL SUPPLY		BP-6602-10
2	REEL TAKE 1		BP-6602-1
3	REEL TAKE 2		BP-6602-2
4	SLOW	H	BP-6602-11
5	SCK		BP-6602-9
6	SO		BP-6602-7
7	COUNTER ZERO	H	BP-6602-8
8	CASSET DOWN	L	BP-6602-3
9	RESET	H	BP-6602-12
10	DEW	L	BP-6602-4
11	SI		BP-6602-6
12	SCK		BP-6602-5

OPERATION BOARD (VEP06176A)

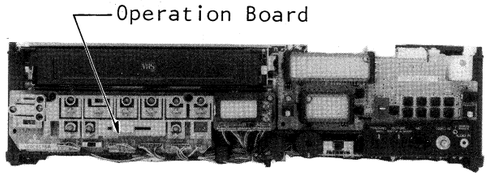

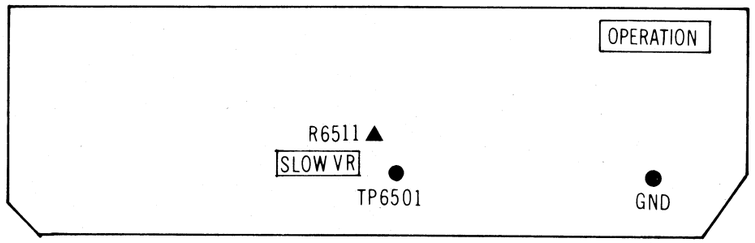

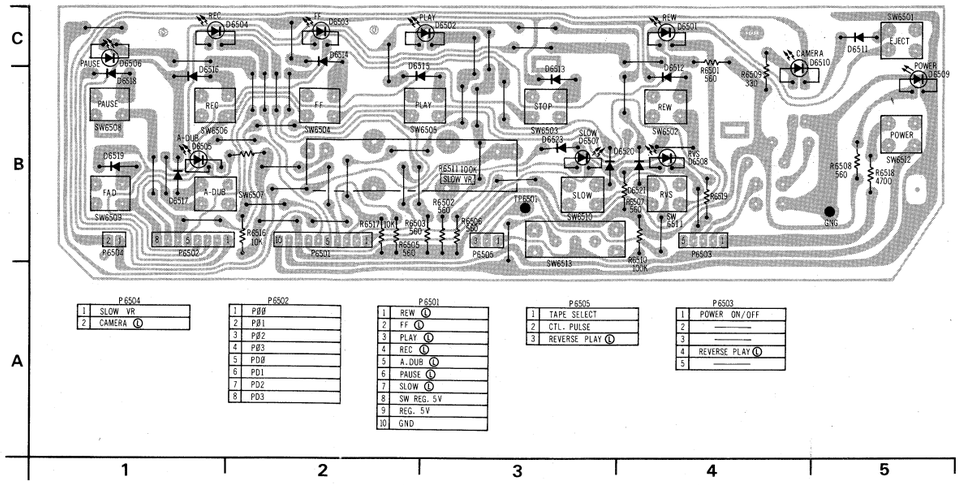

Servo	
Q2001	D-6
Q2002	E-6
Q2003	E-5
Q2004	B-5
Q2005	G-7
Q2006	G-7
Q2007	F-8
Q2008	F-8
Q2009	G-9
Q2010	G-9
Q2011	G-10
Q2012	F-10
Q2013	F-11
Q2014	F-10
Q2015	F-10
Q2016	E-15
Q2018	G-17
Q2019	F-17
Q2020	D-15
Q2021	D-10
Q2022	C-11
Q2023	C-11
Q2024	B-9
Q2027	B-10
Q2028	B-11
Q2029	B-11
IC2001	E-9
IC2002	F-5
IC2003	C-6
IC2004	C-13
IC2005	C-9
IC2006	D-17
IC2007	E-12
IC2008	E-14
IC2009	F-16
IC2010	F-13
IC2011	G-11

OPERATION SCHEMATIC DIAGRAM

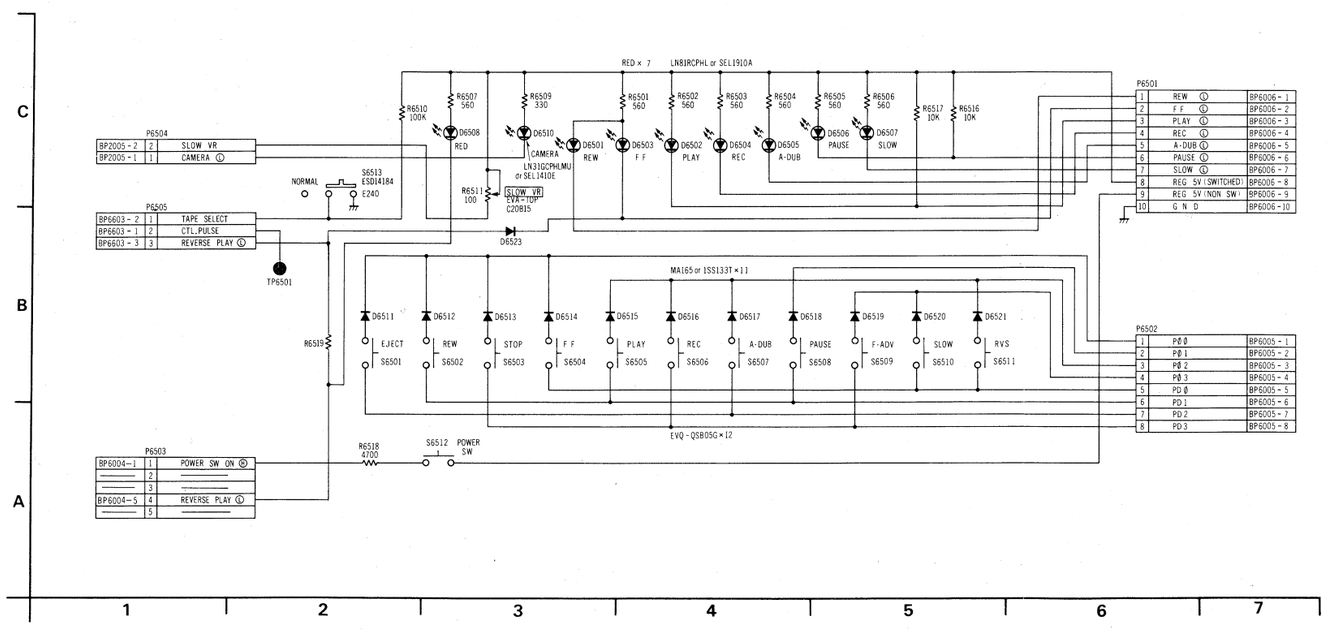

SERVO SCHEMATIC DIAGRAM

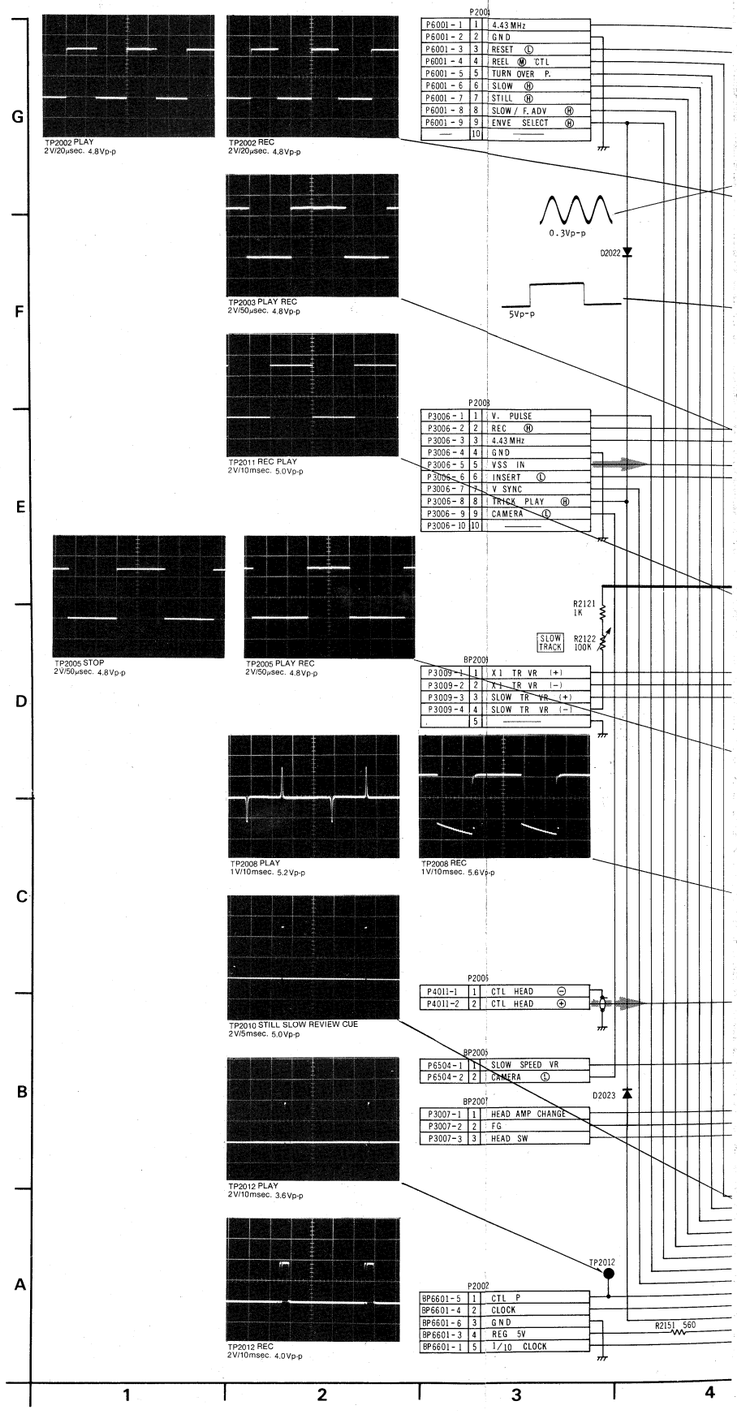

SERVO SCHEMATIC DIAGRAM

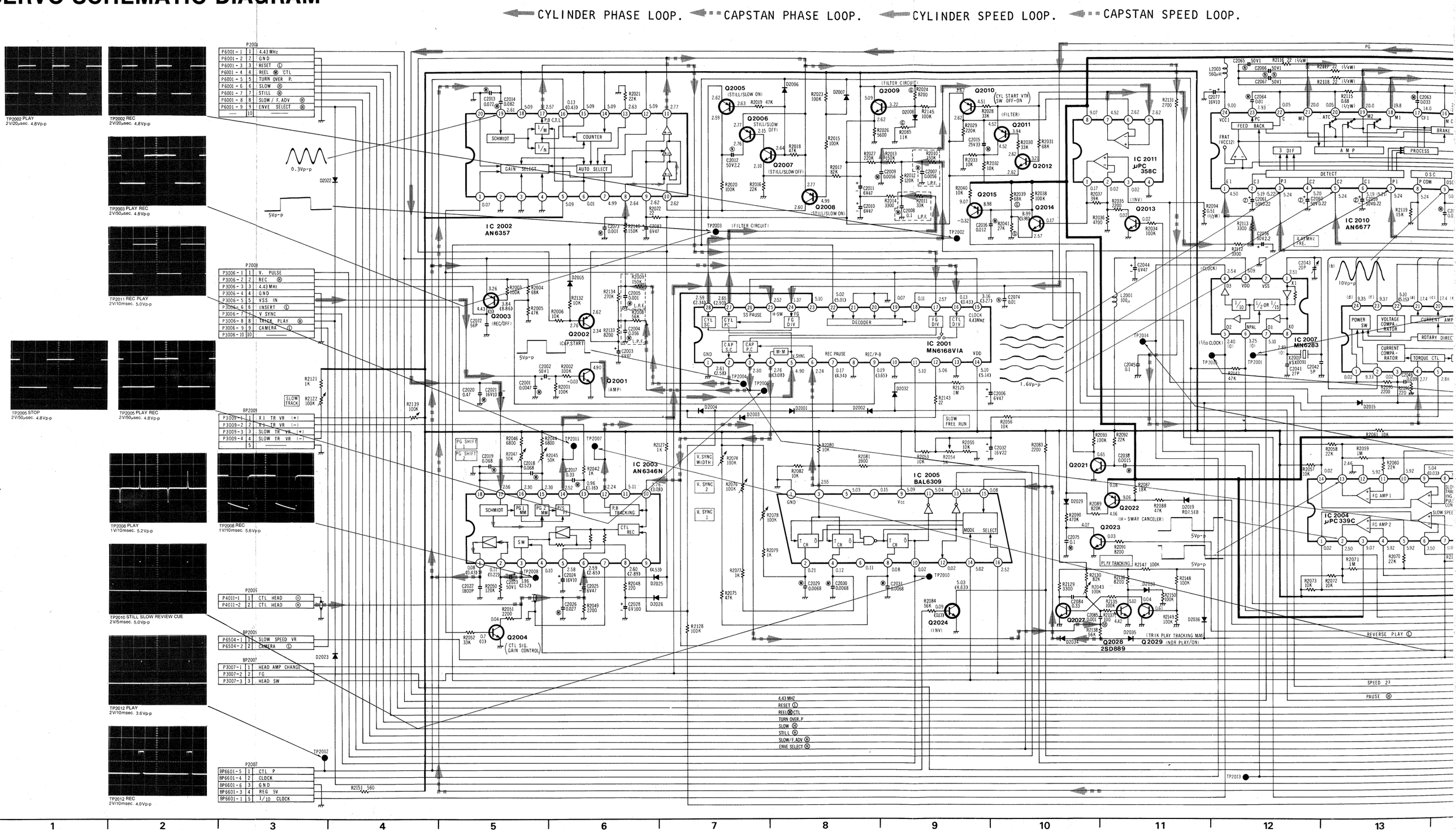

1 2 3 4 5 6 7 8 9 10 11 12 13

. CYLINDER SPEED LOOP. CAPSTAN SPEED LOOP.

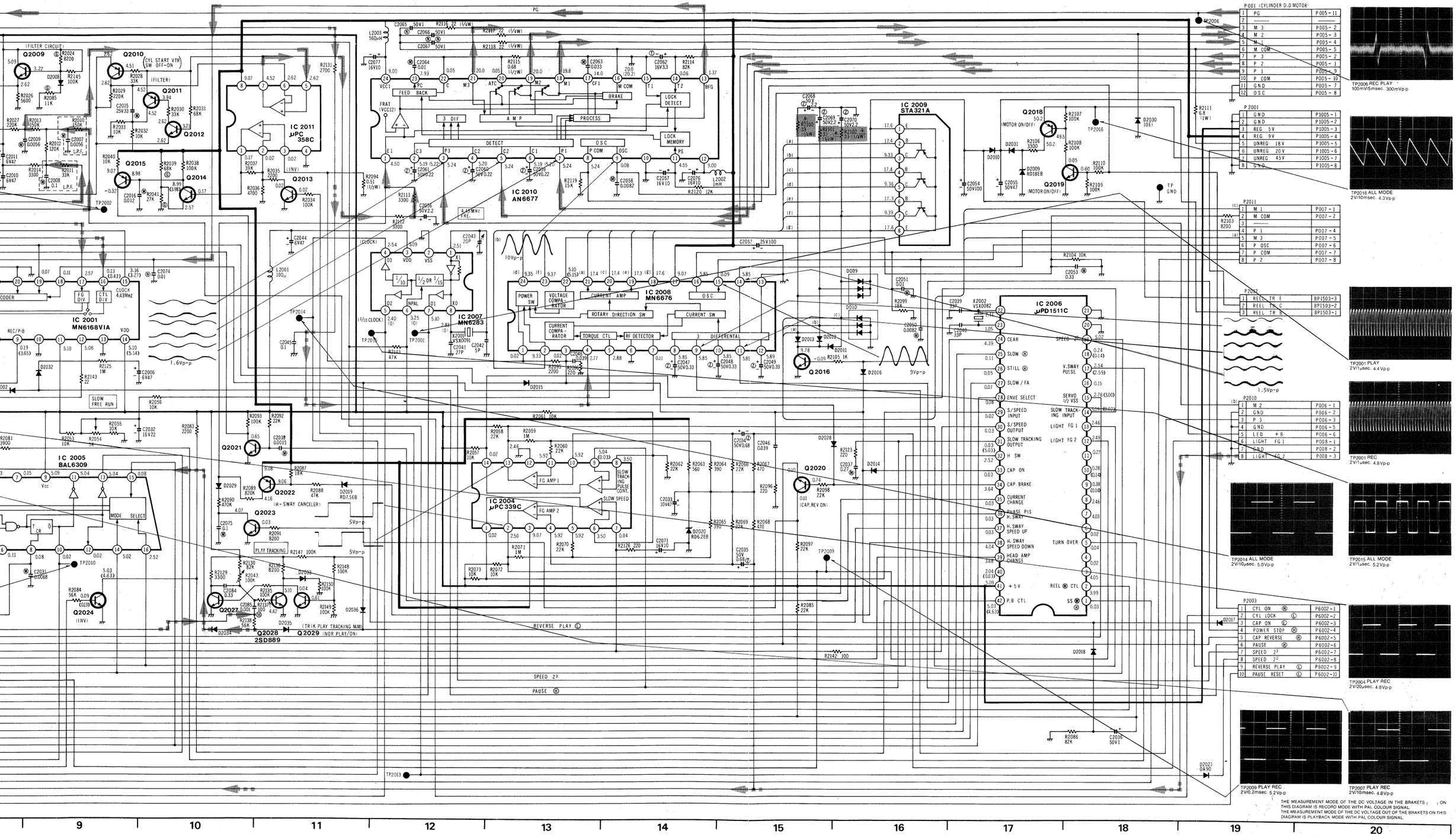

P001 (CYLINDER D.D MOTOR)

1	PG	P005-11
2	——	——
3	M 3	P005-2
4	M 2	P005-3
5	M 1	P005-4
6	M COM	P005-5
7	P 3	P005-2
8	P 2	P005-1
9	P 1	P005-9
10	P COM	P005-10
11	G N D	P005-7
12	O S C	P005-8

P 2001

1	G N D	P1005-1
2	G N D	P1005-2
3	REG 5V	P1005-3
4	REG 9V	P1005-4
5	UNREG 18V	P1005-5
6	UNREG 20V	P1005-6
7	UNREG 45V	P1005-7
8	D.C.D	P1005-8

P2011

1	M 1	P007-1
2	M COM	P007-2
3	——	——
4	P 1	P007-4
5	M 3	P007-5
6	P OSC	P007-6
7	P COM	P007-7
8	P 2	P007-8

P2012

1	REEL TR E	BP1503-3
2	REEL TR C	BP1503-2
3	REEL TR B	BP1503-1

P2010

1	M 2	P006-1
2	G N D	P006-2
3	P 3	P006-3
4	G N D	P006-5
5	L E D + B	P006-6
6	L I G H T F G 1	P008-1
7	G N D	P008-2
8	L I G H T F G 2	P008-3

P2003

1	CYL ON (H)	P6002-1
2	CYL LOCK (L)	P6002-2
3	CAP ON (L)	P6002-3
4	POWER STOP (H)	P6002-4
5	CAP REVERSE (H)	P6002-5
6	PAUSE (H)	P6002-6
7	SPEED 2³	P6002-7
8	SPEED 2³	P6002-8
9	REVERSE PLAY (L)	P6002-9
10	PAUSE RESET (L)	P6002-10

THE MEASUREMENT MODE OF THE DC VOLTAGE IN THE BRAKETS ( ) ON THIS DIAGRAM IS RECORD MODE WITH PAL COLOUR SIGNAL.
THE MEASUREMENT MODE OF THE DC VOLTAGE OUT OF THE BRAKETS ON THIS DIAGRAM IS PLAYBACK MODE WITH PAL COLOUR SIGNAL.

SERVO BOARD (VEP02155A)

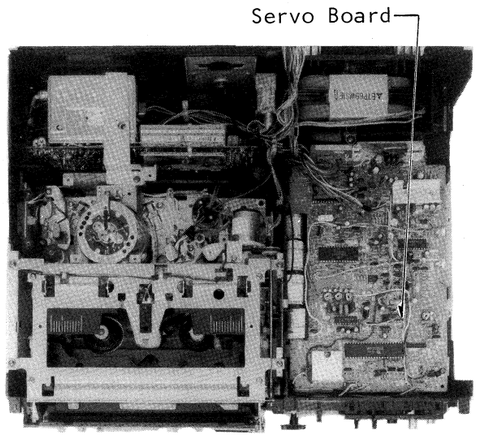

Servo C.B.A	
Q2001	D-4
Q2002	C-3
Q2003	D-6
Q2004	C-5
Q2005	B-4
Q2006	B-4
Q2007	B-4
Q2008	A-4
Q2009	B-5
Q2010	B-5
Q2011	B-4
Q2012	B-5
Q2013	C-4
Q2014	C-5
Q2015	C-5
Q2016	C-3
Q2018	C-2
Q2019	C-3
Q2020	A-3
Q2021	C-7
Q2022	B-7
Q2023	B-7
Q2024	C-7
Q2027	A-6
Q2028	A-7
Q2029	A-7
IC2001	D-4
IC2002	B-4
IC2003	D-6
IC2004	B-6
IC2005	B-6
IC2006	C-6
IC2007	D-7
IC2008	B-3
IC2009	B-2
IC2010	D-3
IC2011	C-5

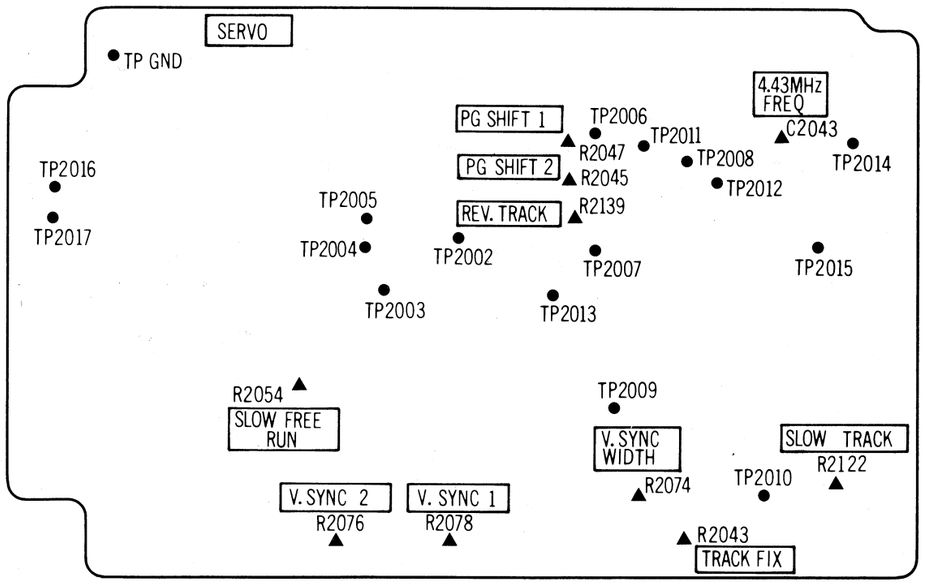

P2003	
1	CYL ON Ⓗ
2	CYL LOCK Ⓛ
3	CAP ON Ⓗ
4	POWER STOP Ⓗ
5	CAP REVERSE Ⓗ
6	PAUSE Ⓗ
7	SPEED 2³
8	SPEED 2⁰
9	REVERSE PLAY Ⓛ
10	PAUSE RESET Ⓛ

P2001	
1	GND
2	GND
3	REG 5V
4	REG 9V
5	UNREG 18V
6	UNREG 20V
7	UNREG 45V
8	GND

P001	
1	PG
2	———
3	M3
4	M2
5	M1
6	M COM
7	P3
8	P2
9	P1
10	P COM
11	GND
12	OSC

P2010	
1	M2
2	P. GND
3	P3
4	GND
5	LED(+B)
6	LIGHT FG1
7	GND
8	LIGHT FG2

P2011	
1	M1
2	M COM
3	———
4	P1
5	M3
6	P OSC
7	P COM
8	P2

P2012	
1	REEL TR E
2	REEL TR C
3	REEL TR B

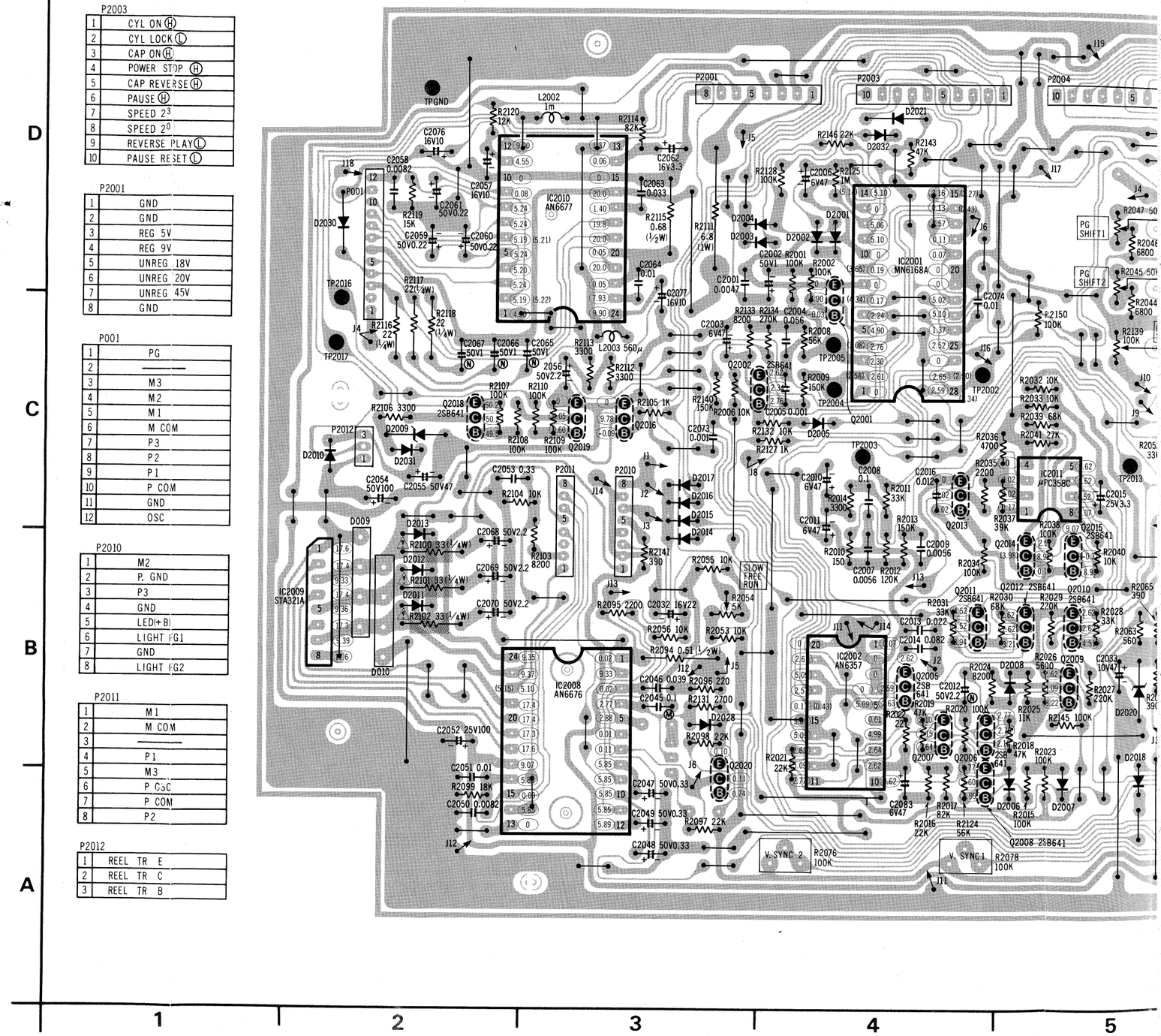

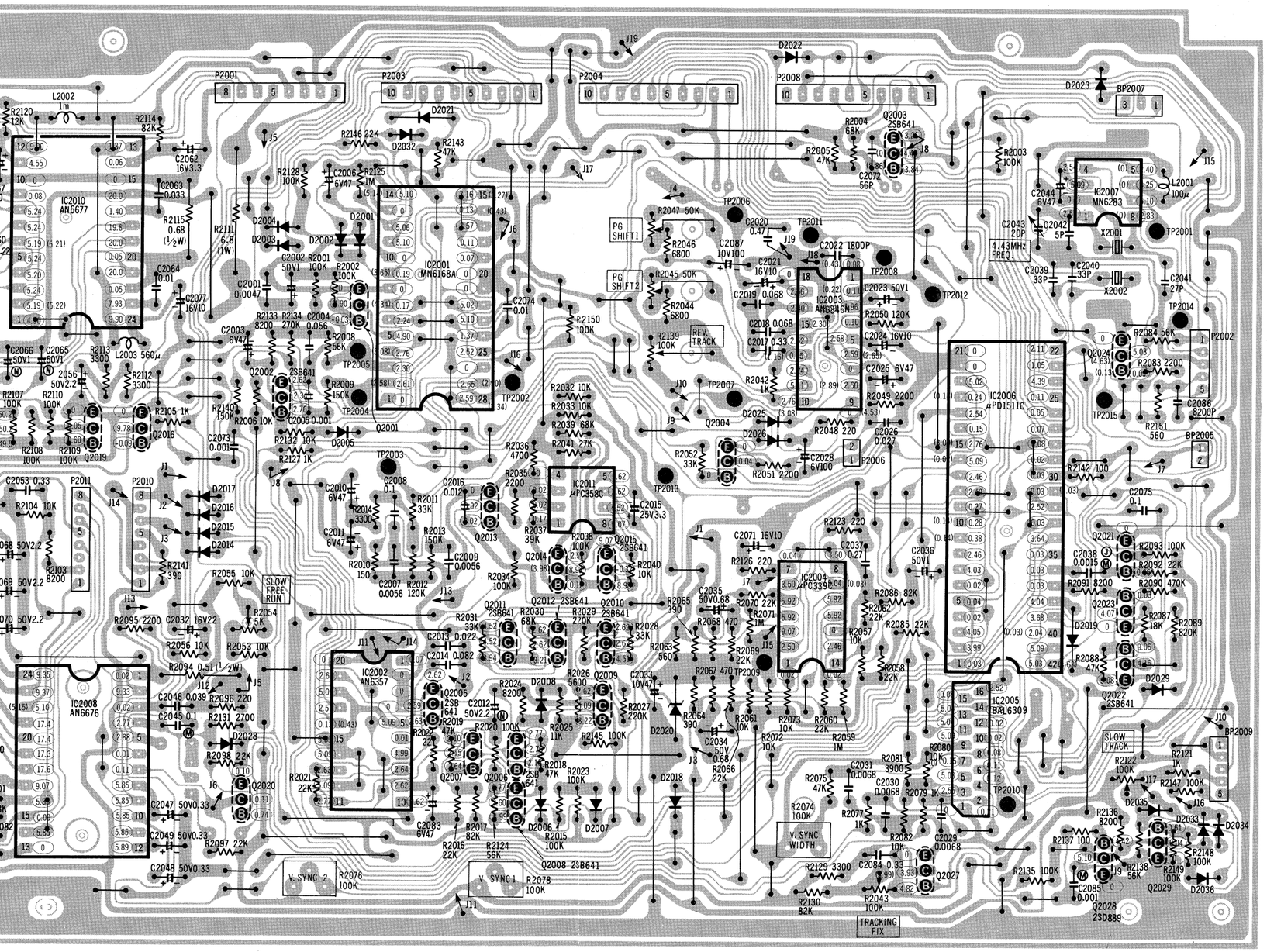

NOTE: UNLESS OTHERWISE SPECIFIED, ALL DIODES ARE MA165
UNLESS OTHERWISE SPECIFIED, ALL Tr's ARE 2SD636

P2004

1	4.43MHz
2	GND
3	RESET Ⓛ
4	REEL Ⓜ CTL
5	TURN OVER P
6	SLOW Ⓗ
7	STILL Ⓗ
8	SLOW/F-ADV Ⓗ
9	ENV SELECT Ⓗ
10	——

P2008

1	V.PULSE
2	REC Ⓗ
3	4.43MHz
4	GND
5	VSS OUT
6	INSERT Ⓛ
7	V SYNC
8	TRICK PLAY Ⓗ
9	CAMERA Ⓛ
10	——

BP2007

1	HEAD AMP CHANGE
2	FG
3	HEAD SW

P2002

1	CTL P
2	1/10 CLOCK
3	GND
4	REG 5V
5	CLOCK

P2006

1	CTL P. ⊖
2	CTL P. ⊕

BP2005

1	SLOW SPEED VR
2	CAMERA Ⓛ

BP2009

1	X1 TR VR(+)
2	X1 TR VR(−)
3	SLOW TR VR(+)
4	SLOW TR VR(−)
5	——

E. COUNTER & TAPE REMAIN IC VOLTAG

REF. NO.	IC6601									
MODE	1	2	3	4	5	6	7	8	9	10
STOP	0.56	0	0	0	0.88	4.07	4.46	0	5.09	0
PLAY	0.43	0	0	0	—	—	4.46	0	5.09	0
REC	0.65	0	0	0	—	—	4.46	0	5.09	0
F.F	0.60	0	0	0	—	—	4.46	0	5.09	0
REW	0.69	0	0	0	—	—	4.46	0	5.09	0

REF. NO.	IC6601									
MODE	21	22	23	24	25	26	27	28	29	30
STOP	2.53	0	2.16	3.13	5.08	5.09	3.60	3.61	3.61	3.61
PLAY	2.53	0	2.22	3.17	4.11	5.09	3.63	3.66	3.64	3.65
REC	2.53	0	2.26	4.21	4.11	5.09	3.67	3.67	3.66	3.66
F.F	2.53	0	2.25	3.20	4.11	5.09	3.65	3.65	3.66	3.66
REW	2.53	0	2.24	3.20	4.11	5.09	3.62	3.64	3.64	3.64

REF. NO.	IC6601									
MODE	41	42	43	44	45	46	47	48	49	50
STOP	3.63	3.63	3.61	3.61	3.61	3.60	3.60	3.61	3.61	3.60
PLAY	3.66	3.65	3.65	3.66	3.64	3.65	3.65	3.65	3.65	3.66
REC	3.66	3.66	3.66	3.64	3.64	3.66	3.65	3.67	3.66	3.68
F.F	3.66	3.65	3.62	3.62	3.62	3.61	3.62	3.61	3.61	3.62
REW	3.63	3.63	3.61	3.61	3.61	3.61	3.62	3.60	3.61	3.61

REF. NO.	IC6601									
MODE	61	62	63	64						
STOP	0.10	4.63	0.21	0						
PLAY	0.10	—	0.21	0						
REC	0.10	—	0.21	0						
F.F	0.10	2.27	0.21	0						
REW	0.10	2.27	0.21	0						

E. COUNTER & TAPE REMA

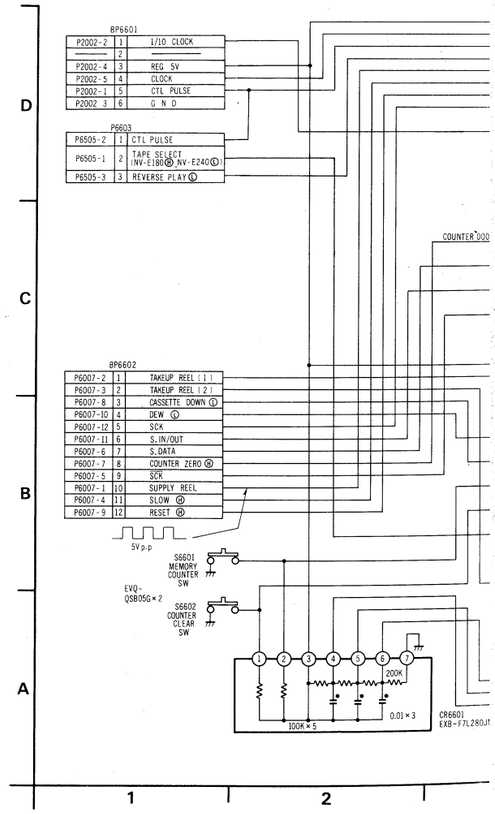

P2004

1	4.43MHz
2	GND
3	RESET Ⓛ
4	REEL Ⓜ CTL
5	TURN OVER P
6	SLOW Ⓗ
7	STILL Ⓗ
8	SLOW/F-ADV Ⓗ
9	ENV SELECT Ⓗ
10	———

P2008

1	V.PULSE
2	REC Ⓗ
3	4.43MHz
4	GND
5	VSS OUT
6	INSERT Ⓛ
7	V SYNC
8	TRICK PLAY Ⓗ
9	CAMERA Ⓛ
10	———

BP2007

1	HEAD AMP CHANGE
2	FG
3	HEAD SW

P2002

1	CTL P
2	1/10 CLOCK
3	GND
4	REG 5V
5	CLOCK

P2006

1	CTL P. ⊖
2	CTL P. ⊕

BP2005

1	SLOW SPEED VR
2	CAMERA Ⓛ

BP2009

1	X1 TR VR (+)
2	X1 TR VR (−)
3	SLOW TR VR (+)
4	SLOW TR VR (−)
5	———

D, ALL DIODES ARE MA165
D, ALL Tr's ARE 2SD636

E. COUNTER & TAPE REMAIN IC VOLTAGE CHART

REF. NO.	IC6601																			
MODE	1	2	3	4	5	6	7	8	9	10	11	12	13	14	15	16	17	18	19	20
STOP	0.56	0	0	0	0.88	4.07	4.46	0	5.09	0	0	5.09	0	5.04	5.00	5.14	0	0	0	2.48
PLAY	0.43	0	0	0	—	—	4.46	0	5.09	0	0	5.09	0	5.04	5.00	5.14	0	—	—	2.48
REC	0.65	0	0	0	—	—	4.46	0	5.09	0	0	5.09	0	5.04	5.00	5.14	0	—	—	2.48
F.F	0.60	0	0	0	—	—	4.46	0	5.09	0	0	5.09	0	5.04	5.00	5.14	0	2.33	2.32	2.48
REW	0.69	0	0	0	—	—	4.46	0	5.09	0	0	5.09	0	5.04	5.00	5.14	0	2.33	2.32	2.48

REF. NO.	IC6601																			
MODE	21	22	23	24	25	26	27	28	29	30	31	32	33	34	35	36	37	38	39	40
STOP	2.53	0	2.16	3.13	5.08	5.09	3.60	3.61	3.61	3.61	3.63	3.62	3.63	3.63	3.62	3.63	3.63	3.63	3.63	3.63
PLAY	2.53	0	2.22	3.17	4.11	5.09	3.63	3.66	3.64	3.65	3.68	3.68	3.68	3.64	3.64	3.67	3.65	3.67	3.66	3.64
REC	2.53	0	2.26	4.21	4.11	5.09	3.67	3.67	3.66	3.66	3.67	3.70	3.68	3.66	3.67	0.86	3.66	3.68	3.67	3.66
F.F	2.53	0	2.25	3.20	4.11	5.09	3.65	3.65	3.66	3.66	3.66	3.67	3.63	3.62	3.66	3.65	3.63	3.65	3.64	3.62
REW	2.53	0	2.24	3.20	4.11	5.09	3.62	3.64	3.64	3.64	3.65	3.63	3.63	3.64	3.63	3.63	3.63	3.63	3.63	3.63

REF. NO.	IC6601																			
MODE	41	42	43	44	45	46	47	48	49	50	51	52	53	54	55	56	57	58	59	60
STOP	3.63	3.63	3.61	3.61	3.61	3.60	3.60	3.61	3.61	3.60	3.60	3.60	3.60	3.60	0.06	0	2.42	5.09	2.66	4.54
PLAY	3.66	3.65	3.65	3.66	3.64	3.65	3.65	3.65	3.65	3.66	3.65	3.65	3.65	3.65	0.11	0	2.42	5.09	2.66	4.54
REC	3.66	3.66	3.66	3.64	3.64	3.66	3.65	3.67	3.66	3.68	3.67	3.65	3.66	3.66	0.42	0	2.42	5.09	2.66	4.54
F.F	3.66	3.65	3.62	3.62	3.62	3.61	3.62	3.61	3.61	3.62	3.61	3.62	3.61	3.61	0.06	0	2.42	5.09	2.66	4.54
REW	3.63	3.63	3.61	3.61	3.61	3.61	3.62	3.60	3.61	3.61	3.61	3.61	3.62	3.62	0.06	0	2.42	5.09	2.66	4.54

REF. NO.	IC6601			
MODE	61	62	63	64
STOP	0.10	4.63	0.21	0
PLAY	0.10	—	0.21	0
REC	0.10	—	0.21	0
F.F	0.10	2.27	0.21	0
REW	0.10	2.27	0.21	0

E. COUNTER & TAPE REMAIN BOARD (VEP06177A)

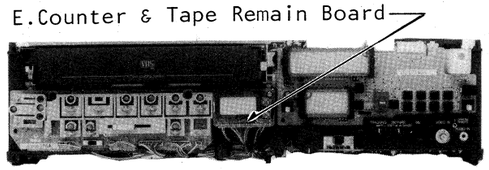

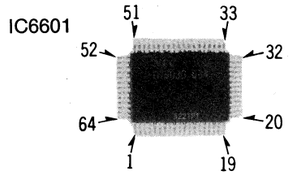

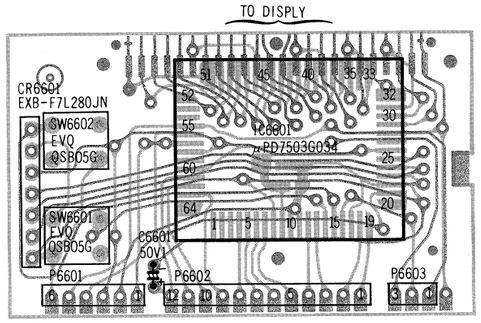

BP6601

1	1/10 CLOCK
2	———
3	REG 5V
4	CLOCK (295KHz)
5	CTL PULSE
6	GND

BP6602

1	TAKE UP REEL (1)
2	TAKE UP REEL (2)
3	CASSETTE D Ⓛ
4	DEW Ⓛ
5	SCK
6	S IN/OUT
7	S DATA
8	COUNTER Z Ⓗ
9	$\overline{SCK}$
10	SUPPLY REEL
11	SLOW Ⓗ
12	RESET Ⓗ

BP6603

1	CTL PULSE
2	TAPE SELECT
3	REVERSE PLAY Ⓛ

E. COUNTER & TAPE REMAIN SCHEMATIC DIAGRAM

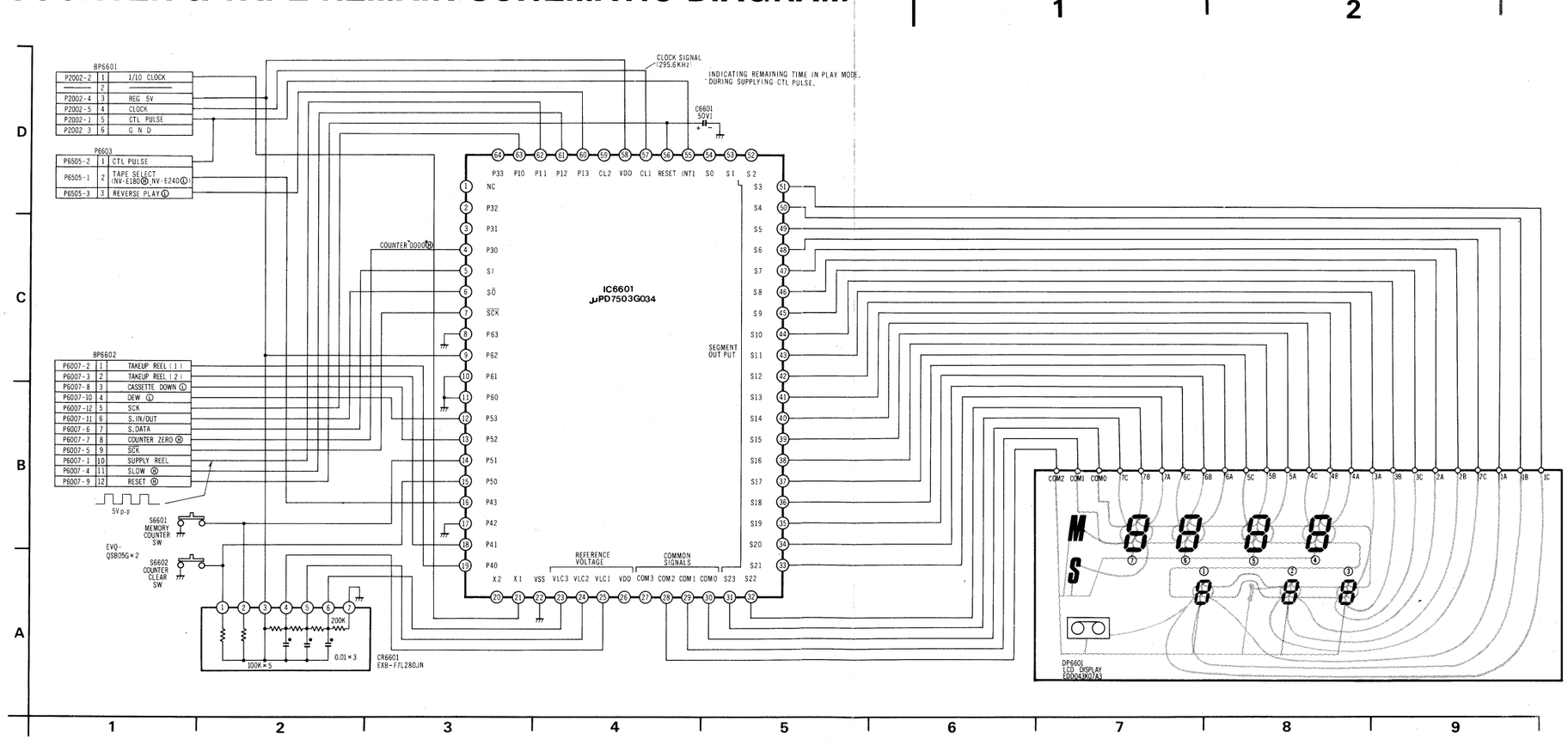

LUMINANCE, CHROMINANCE & AUDIO BOARD (VEP03150A: NV-777E, B/VEP03150B: NV-777EG)

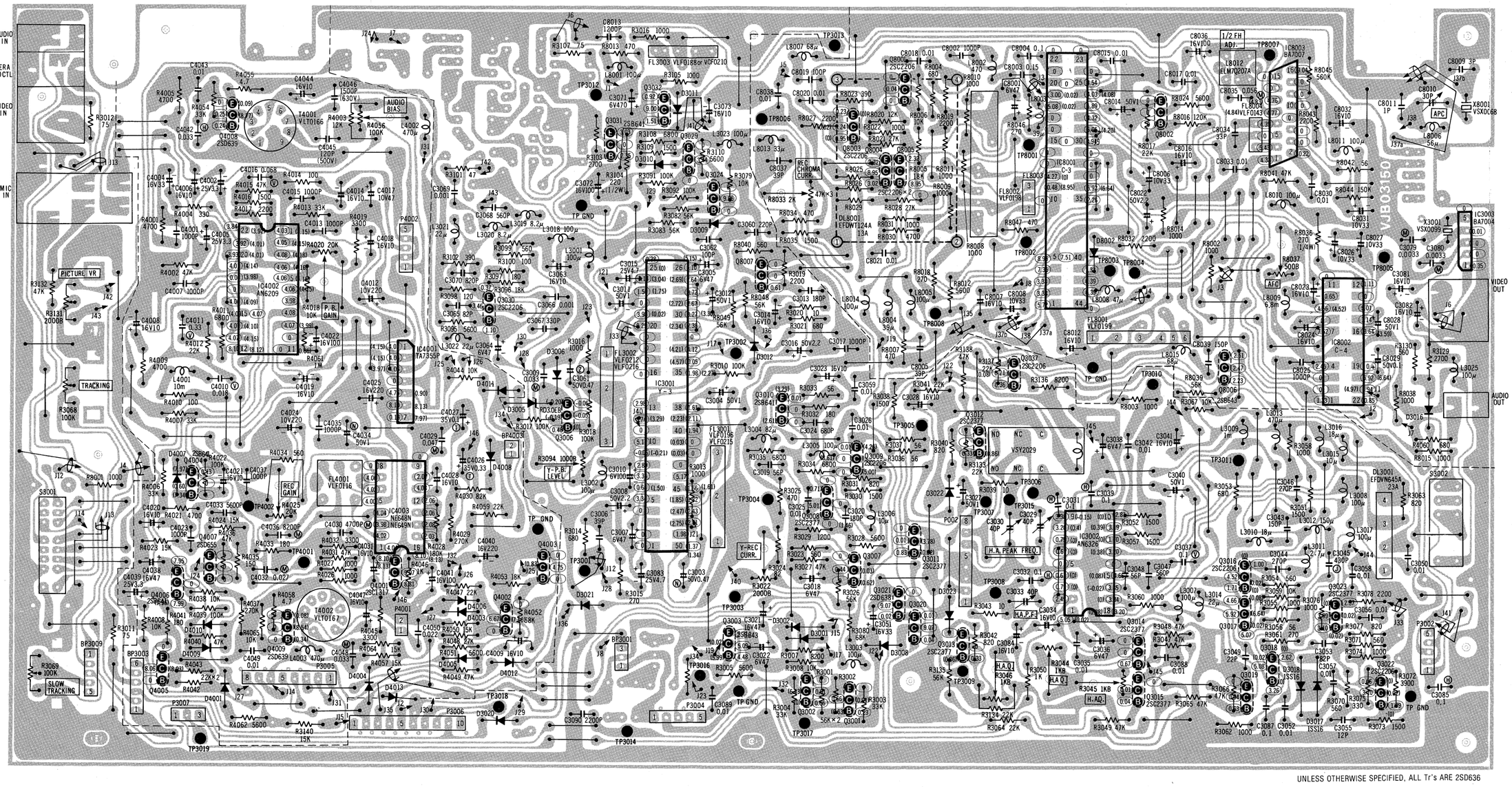

UNLESS OTHERWISE SPECIFIED, ALL Tr's ARE 2SD636

Luminance Chrom Audio C.B.A
Luminance Se
Q3001
Q3003
Q3006
Q3007
Q3008
Q3009
Q3010
Q3011
Q3012
Q3013
Q3014
Q3015
Q3016
Q3017
Q3018
Q3019
Q3020
Q3021
Q3022
Q3023
Q3024
Q3029
Q3030
Q3031
Q3032
Q3037
IC3001
IC3002
IC3003

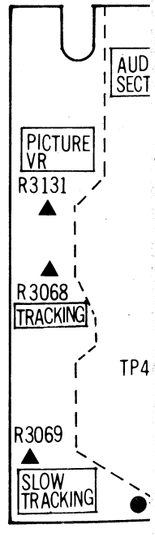

BP3001

1	UNREG 18V
2	GND
3	CAMERA Ⓛ

P3002

1	+9V
2	———
3	VIDEO OUT
4	G N D
5	AUDIO OUT

BP3003

1	G N D
2	VIDEO IN
3	VTR 9V
4	G N D
5	AUDIO IN
6	E-E 9V

P3004

1	UNREG 18V
2	REG 9V
3	REG 5V
4	GND
5	———

P3005

1	VTR 9V
2	AD & D.REC 9V
3	A·D Ⓗ
4	AUDIO MUTE
5	REC 9V
6	DELAYED REC 9V
7	CAMERA PAUSE Ⓛ
8	E E 9V

P3006

1	V-PULSE
2	REC 9V
3	4.43MHz IN
4	G N D
5	VSS OUT
6	INSERT Ⓛ
7	V-SYNC
8	TRIC PLAY Ⓗ
9	CAMERA Ⓗ
10	———

P3007

1	HEAD AMP SW
2	FG
3	HEAD SW

P3009

1	TR VR ⊕
2	TR VR ⊖
3	S.TR VR ⊕
4	S.TR VR ⊖
5	———

P4001

1	FE HEAD
2	G N D

BP4003

1	NR LED
2	NR SW ON Ⓛ

P4002

1	AUDIO H (R)
2	G N D
3	AUDIO H (W)
4	G N D
5	AE HEAD

P002

1	L CH (F)
2	L CH (S)
3	G N D
4	G N D
5	L' CH (S)
6	L' CH (F)
7	R CH (F)
8	R CH (S)

NOTE: The Parts indicated in Blue are used for NV-777EG.

G)

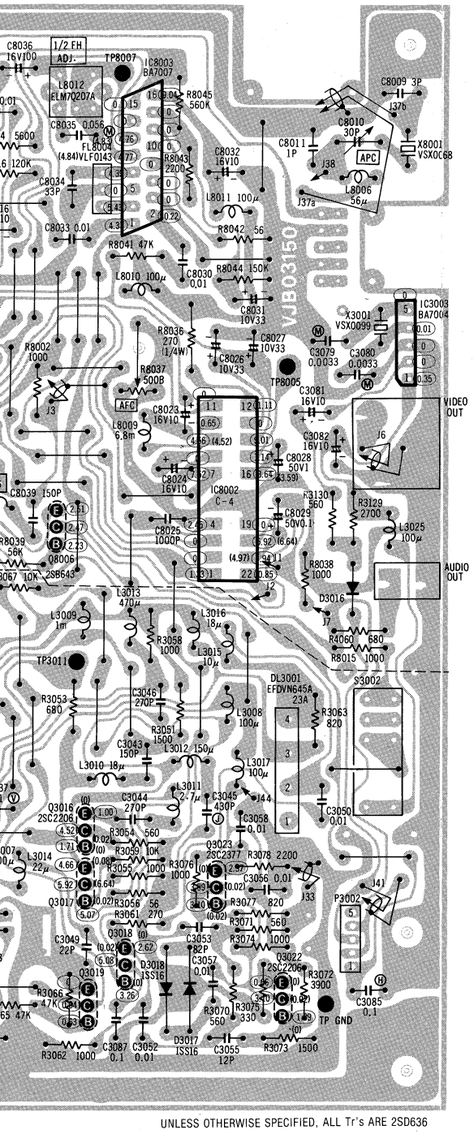

UNLESS OTHERWISE SPECIFIED, ALL Tr's ARE 2SD636

	F)
	S)
	S)
	F)
	F)
	S)

NOTE: The Parts indicated in Blue are used for NV-777EG.

8 | 9

Luminance Chrominance & Audio C.B.A

Luminance Section		Audio Selection	
Q3001	B-5	Q4001	C-3
Q3003	B-5	Q4002	B-3
Q3006	C-4	Q4003	C-4
Q3007	B-5	Q4004	C-2
Q3008	C-5	Q4005	B-2
Q3009	C-5	Q4006	B-2
Q3010	C-5	Q4007	C-2
Q3011	C-6	Q4008	E-2
Q3012	C-6	Q4009	B-2
Q3013	B-6		
Q3014	B-7	IC4001	C-3
Q3015	B-7	IC4002	D-2
Q3016	C-7	IC4003	C-3
Q3017	B-7	**Chrominance Section**	
Q3018	B-8		
Q3019	B-7	Q8001	E-6
Q3020	B-6	Q8002	E-7
Q3021	B-6	Q8003	E-5
Q3022	B-8	Q8004	E-5
Q3023	B-8	Q8005	E-6
Q3024	D-5	Q8006	D-7
Q3029	E-4	Q8007	D-5
Q3030	D-3		
Q3031	E-4	IC8001	E-7
Q3032	E-4	IC8002	D-8
Q3037	D-6	IC8003	E-8
IC3001	C-4		
IC3002	C-7		
IC3003	D-9		

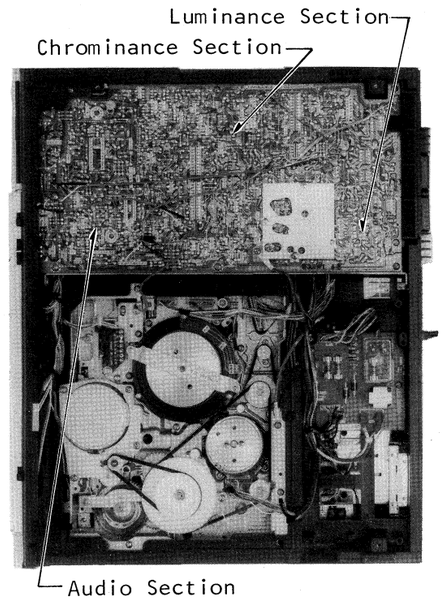

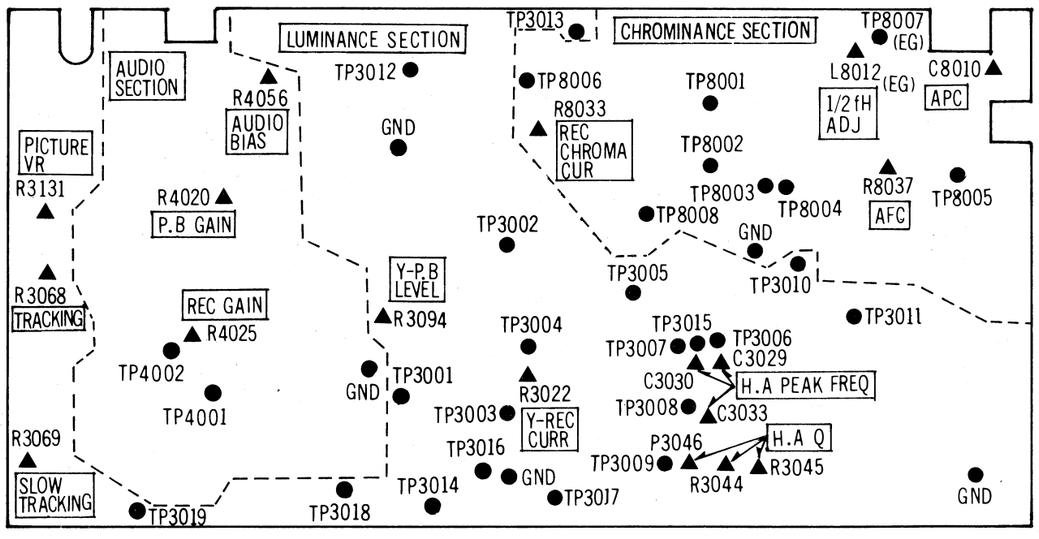

LUMINANCE, CHROMINANCE ICs VOLTAGE CHART

REF. NO.		IC3001																
MODE		1	2	3	4	5	6	7	8	9	10	11	12	13	14	15	16	17
PAL	PLAY	0	0	—	0	3.34	0.66	3.36	2.89	−0.06	5.17	0	3.74	2.98			0	0
	REC	0	0	—	0	3.36	1.50	3.36	2.89	−0.21	5.17	0	3.29	2.98			0	0
SECAM	PLAY	0	0	—	0	3.34	0.66	3.36	2.90	−0.06	5.17	0	3.74	2.98			0	0
	REC	0	0	—	0	3.36	1.50	3.36	2.90	−0.21	5.17	0	3.29	2.98			0	0

REF. NO.		IC3001																
MODE		21	22	23	24	25	26	27	28	29	30	31	32	33	34	35	36	37
PAL	PLAY	3.98	0	1.50	3.14	0.38	5.10	2.64	3.72	2.67	3.27	2.38	0	4.12	0.05	1.98		
	REC	0.02	0	1.75	3.04	0	5.15	2.69	3.73	2.72	3.30	2.34	0	4.21	4.57	2.27		
SECAM	PLAY	3.98	0	1.50	3.17	0.38	5.10	2.64	3.72	2.67	3.31	2.45	0	4.17	0.05	1.98		
	REC	0.02	0	1.78	3.07	0	5.15	2.69	3.73	2.72	3.43	2.45	0	4.29	4.57	2.29		

REF. NO.		IC3001																
MODE		41	42	43	44	45	46	47	48	49	50							
PAL	PLAY	0	0	0	5.17	1.66	1.82	2.43	2.81	1.98	1.37							
	REC	0.03	0.03	0	5.17	1.61	1.85	2.47	2.75	1.96	1.34							
SECAM	PLAY	0.02	0.02	0	5.17	1.68	1.84	2.44	2.81	1.98	1.37							
	REC	0	0	0	5.17	1.63	1.86	2.48	2.75	1.95	1.35							

REF. NO.		IC3002																
MODE		1	2	3	4	5	6	7	8	9	10	11	12	13	14	15	16	17
PAL	PLAY	5.05	2.49	0.79	0.67	0	0.67	0.79	3.20	3.38	2.81	3.19	1.70	3.20	0	4.66	3.85	3.34
	REC	0.02	2.47	0	0	0	0	0	0.40	−0.15	0	0.39	0	0.38	0	0.08	−0.02	0
SECAM	PLAY	5.05	2.49	0.79	0.66	0	0.67	0.79	3.20	3.38	2.81	3.19	1.70	3.20	0	4.66	3.85	3.34
	REC	0.02	2.47	0	0	0	0	0	0.40	−0.16	0	0.38	0	0.38	0	0.08	−0.02	0

REF. NO.		IC3003																
MODE		1	2	3	4	5												
PAL	PLAY	0.35	0	0	0.01	0												
	REC	0.35	0	0	0.01	0												
SECAM	PLAY	0.50	0	0	0.01	0.02												
	REC	0.50	0	0	0.01	0.02												

REF. NO.		IC8001																
MODE		1	2	3	4	5	6	7	8	9	10	11	12	13	14	15	16	17
PAL	PLAY	5.72	3.38	3.38	7.35	8.95					0	0.48	4.27	0	0	0	0	0
	REC	5.71	3.38	3.38	7.35	8.95					0	8.95	0	0	0	0	0	0
SECAM	PLAY	5.71	3.38	3.38	7.35	8.95					0	0.48	4.27	0	8.23	0	0	0
	REC	5.71	3.38	3.38	7.35	8.95					0	8.95	0	0	8.23	0	0	0

REF. NO.		IC8001																
MODE		21	22	23	24	25	26	27	28	29	30	31	32	33	34	35	36	37
PAL	PLAY	0	0	0	0	4.54	4.03	1.89	4.32	5.05	8.94	0	0	0	5.92	2.26		
	REC	0	0	0	0	4.53	4.08	1.89	4.31	4.20	8.94	0	0	0	6.64	2.25		
SECAM	PLAY	0	0	0	0	4.54	4.03	1.81	4.26	5.05	8.95	0	0	0	5.92	7.67		
	REC	0	0	0	0	4.53	4.08	1.80	4.34	4.20	8.95	0	0	0	6.64	7.66		

REF. NO.		IC8001																
MODE		41	42	43	44													
PAL	PLAY	1.33	6.39	6.39	0													
	REC	1.33	6.39	6.39	0													
SECAM	PLAY	1.33	7.32	7.32	0													
	REC	1.33	7.32	7.32	0													

REF. NO.		IC8002																
MODE		1	2	3	4	5	6	7	8	9	10	11	12	13	14	15	16	17
PAL	PLAY	1.33	0	0	2.45			7.52	0	4.56	0.65	0	1.11	0	9.01	1.14	3.64	
	REC	1.33	0	0	2.47			7.52	0	4.52	0.66	0	1.11	0	9.01	1.14	3.59	
SECAM	PLAY	1.33	0	8.23	2.43			7.52	0	4.56	0.68	0	1.11	6.67	9.01	1.13	3.51	
	REC	1.33	0	8.22	2.58			7.52	0	4.53	0.69	0	1.11	6.67	9.00	1.12	3.46	

REF. NO.		IC8003															
MODE		21	22														
PAL	PLAY	4.94	0.85														
	REC	4.97	0.84														
SECAM	PLAY	4.99	0.86														
	REC	5.04	0.86														

REF. NO.		IC8003															
MODE		1	2	3	4	5	6	7	8	9	10	11	12	13	14	15	16
PAL	PLAY	4.33	−0.22	5.43	0	0	0	4.39	0	4.77	0	4.76	0	0	0	0	9.04
	REC	4.33	−0.22	5.42	0	0	0	4.38	0	4.84	0	4.83	0	0	0	0	9.03
SECAM	PLAY	4.36	−0.21	5.45	0	0	0	4.41	0	4.62	0	4.63	4.50	0	4.45	8.23	9.01
	REC	4.36	−0.21	5.45	0	0	0	4.40	0.01	4.62	0.01	4.62	4.54	0	4.49	8.22	9.00

LUMINANCE, CHROMINANCE ICs VOLTAGE CHART

REF. NO.		IC3001																			
MODE		1	2	3	4	5	6	7	8	9	10	11	12	13	14	15	16	17	18	19	20
PAL	PLAY	0	0	—	0	3.34	0.66	3.36	2.89	−0.06	5.17	0	3.74	2.98			0	0	0	0	0.29
	REC	0	0	—	0	3.36	1.50	3.36	2.89	−0.21	5.17	0	3.29	2.98			0	0	0	0	0.28
SECAM	PLAY	0	0	—	0	3.34	0.66	3.36	2.90	−0.06	5.17	0	3.74	2.98			0	0	0	0	0.32
	REC	0	0	—	0	3.36	1.50	3.36	2.90	−0.21	5.17	0	3.29	2.98			0	0	0	0	0.30

REF. NO.		IC3001																			
MODE		21	22	23	24	25	26	27	28	29	30	31	32	33	34	35	36	37	38	39	40
PAL	PLAY	3.98	0	1.50	3.14	0.38	5.10	2.64	3.72	2.67	3.27	2.38	0	4.12	0.05	1.98			1.61	2.11	1.94
	REC	0.02	0	1.75	3.04	0	5.15	2.69	3.73	2.72	3.30	2.34	0	4.21	4.57	2.27			1.62	2.23	1.94
SECAM	PLAY	3.98	0	1.50	3.17	0.38	5.10	2.64	3.72	2.67	3.31	2.45	0	4.17	0.05	1.98			1.62	2.15	1.94
	REC	0.02	0	1.78	3.07	0	5.15	2.69	3.73	2.72	3.43	2.45	0	4.29	4.57	2.29			1.65	2.29	1.94

REF. NO.		IC3001									
MODE		41	42	43	44	45	46	47	48	49	50
PAL	PLAY	0	0	0	5.17	1.66	1.82	2.43	2.81	1.98	1.37
	REC	0.03	0.03	0	5.17	1.61	1.85	2.47	2.75	1.96	1.34
SECAM	PLAY	0.02	0.02	0	5.17	1.68	1.84	2.44	2.81	1.98	1.37
	REC	0	0	0	5.17	1.63	1.86	2.48	2.75	1.95	1.35

REF. NO.		IC3002																			
MODE		1	2	3	4	5	6	7	8	9	10	11	12	13	14	15	16	17	18		
PAL	PLAY	5.05	2.49	0.79	0.67	0	0.67	0.79	3.20	3.38	2.81	3.19	1.70	3.20	0	4.66	3.85	3.34	3.20		
	REC	0.02	2.47	0	0	0	0	0	0.40	−0.15	0	0.39	0	0.38	0	0.08	−0.02	0	0.38		
SECAM	PLAY	5.05	2.49	0.79	0.66	0	0.67	0.79	3.20	3.38	2.81	3.19	1.70	3.20	0	4.66	3.85	3.34	3.20		
	REC	0.02	2.47	0	0	0	0	0	0.40	−0.16	0	0.38	0	0.38	0	0.08	−0.02	0	0.38		

REF. NO.		IC3003				
MODE		1	2	3	4	5
PAL	PLAY	0.35	0	0	0.01	0
	REC	0.35	0	0	0.01	0
SECAM	PLAY	0.50	0	0	0.01	0.02
	REC	0.50	0	0	0.01	0.02

REF. NO.		IC8001																			
MODE		1	2	3	4	5	6	7	8	9	10	11	12	13	14	15	16	17	18	19	20
PAL	PLAY	5.72	3.38	3.38	7.35	8.95					0	0.48	4.27	0	0	0	0	0	5.08	3.00	0
	REC	5.71	3.38	3.38	7.35	8.95					0	8.95	0	0	0	0	0	0	0.02	0.02	0
SECAM	PLAY	5.71	3.38	3.38	7.35	8.95					0	0.48	4.27	0	8.23	0	0	0	5.08	3.00	0
	REC	5.71	3.38	3.38	7.35	8.95					0	8.95	0	0	8.23	0	0	0	0.02	0.02	0

REF. NO.		IC8001																			
MODE		21	22	23	24	25	26	27	28	29	30	31	32	33	34	35	36	37	38	39	40
PAL	PLAY	0	0	0	0	4.54	4.03	1.89	4.32	5.05	8.94	0	0	0	5.92	2.26					7.51
	REC	0	0	0	0	4.53	4.08	1.89	4.31	4.20	8.94	0	0	0	6.64	2.25					7.50
SECAM	PLAY	0	0	0	0	4.54	4.03	1.81	4.26	5.05	8.95	0	0	0	5.92	7.67					7.53
	REC	0	0	0	0	4.53	4.08	1.80	4.34	4.20	8.95	0	0	0	6.64	7.66					7.52

REF. NO.		IC8001																			
MODE		41	42	43	44																
PAL	PLAY	1.33	6.39	6.39	0																
	REC	1.33	6.39	6.39	0																
SECAM	PLAY	1.33	7.32	7.32	0																
	REC	1.33	7.32	7.32	0																

REF. NO.		IC8002																			
MODE		1	2	3	4	5	6	7	8	9	10	11	12	13	14	15	16	17	18	19	20
PAL	PLAY	1.33	0	0	2.45			7.52	0	4.56	0.65	0	1.11	0	9.01	1.14	3.64			0	5.92
	REC	1.33	0	0	2.47			7.52	0	4.52	0.66	0	1.11	0	9.01	1.14	3.59			0	6.64
SECAM	PLAY	1.33	0	8.23	2.43			7.52	0	4.56	0.68	0	1.11	6.67	9.01	1.13	3.51			0	5.92
	REC	1.33	0	8.22	2.58			7.52	0	4.53	0.69	0	1.11	6.67	9.00	1.12	3.46			0	6.64

REF. NO.		IC8003																			
MODE		21	22																		
PAL	PLAY	4.94	0.85																		
	REC	4.97	0.84																		
SECAM	PLAY	4.99	0.86																		
	REC	5.04	0.86																		

REF. NO.		IC8003																			
MODE		1	2	3	4	5	6	7	8	9	10	11	12	13	14	15	16				
PAL	PLAY	4.33	−0.22	5.43	0	0	0	4.39	0	4.77	0	4.76	0	0	0	0	9.04				
	REC	4.33	−0.22	5.42	0	0	0	4.38	0	4.84	0	4.83	0	0	0	0	9.03				
SECAM	PLAY	4.36	−0.21	5.45	0	0	0	4.41	0	4.62	0	4.63	4.50	0	4.45	8.23	9.01				
	REC	4.36	−0.21	5.45	0	0	0	4.40	0.01	4.62	0.01	4.62	4.54	0	4.49	8.22	9.00				

LUMINANCE, CHROMINANCE TRANSISTORs VOLTAGE CHART

REF. NO.		Q3001			Q3002			Q3003			Q3004			Q3005			Q3006		
MODE		E	C	B	E	C	B	E	C	B	E	C	B	E	C	B	E	C	B
PAL	PLAY	0	0.66	0.23	0	0.01	0.66	5.21	5.09	4.48							−0.06	−0.05	0.48
	REC	0	0.01	0.63	0	6.43	0	5.21	0.02	5.99							−0.20	−0.19	0
SECAM	PLAY	0	0.66	0.23	0	0.01	0.66	5.21	5.09	4.48							−0.06	−0.06	0.48
	REC	0	0.01	0.63	0	6.43	0	5.21	0.02	5.99							−0.20	−0.19	0

REF. NO.		Q3007			Q3008			Q3009			Q3010			Q3011			Q3012		
MODE		E	C	B	E	C	B	E	C	B	E	C	B	E	C	B	E	C	B
PAL	PLAY	0	0.44	0	0	0	0	0.01	0	0	0.01	0	0	0	0.01	0.83	0	0	0.33
	REC	0	0.03	0.62	0.71	5.01	1.46	4.26	8.61	5.00	3.29	0	2.61	0	3.78	0.02	0	0	0.86
SECAM	PLAY	0	0.44	0	0	0	0	0.01	0	0	0.01	0	0	0	0.01	0.83	0	0	0.33
	REC	0	0.03	0.62	0.71	5.01	1.46	4.26	8.62	5.00	3.29	0	2.61	0	3.78	0.02	0	0	0.86

REF. NO.		Q3013			Q3014			Q3015			Q3016			Q3017			Q3018		
MODE		E	C	B	E	C	B	E	C	B	E	C	B	E	C	B	E	C	B
PAL	PLAY	0	0	0.33	0	0	0.67	0	0.01	0.04	1.00	4.52	1.71	4.66	5.92	5.07	2.62	5.08	3.26
	REC	0	0	0.86	0	0	0.67	0	0.01	0.04	0	0.02	0	0.08	6.64	0.02	0	0.02	0
SECAM	PLAY	0	0	0.33	0	0	0.67	0	0.01	0.04	1.00	4.52	1.71	4.66	5.92	5.07	2.62	5.08	3.26
	REC	0	0	0.86	0	0	0.67	0	0.01	0.04	0	0.02	0	0.08	6.64	0.02	0	0.02	0

REF. NO.		Q3019			Q3020			Q3021			Q3022			Q3023			Q3024		
MODE		E	C	B	E	C	B	E	C	B	E	C	B	E	C	B	E	C	B
PAL	PLAY	0	0.04	0.63	0.01	9.07	0.04	0	9.07	0.02	0.66	3.10	1.39	2.37	3.99	3.10	0	9.06	0
	REC	0	0.04	0.63	0.01	9.06	0.04	0	9.06	0.02	0	0.02	0	0	0.02	0.02	0	9.05	0
SECAM	PLAY	0	0.04	0.63	0.04	9.07	0.04	0	9.07	0.04	0.66	3.10	1.39	2.37	3.99	3.10	0	9.06	0
	REC	0	0.04	0.63	0.04	9.06	0.04	0	9.06	0.04	0	0.02	0	0	0.02	0.02	0	9.05	0

REF. NO.		Q3025			Q3026			Q3027			Q3028			Q3029			Q3030		
MODE		E	C	B	E	C	B	E	C	B	E	C	B	E	C	B	E	C	B
PAL	PLAY													0	3.44	0	0.37	3.46	1.10
	REC													0	3.44	0	0.37	3.46	1.10
SECAM	PLAY													0	3.43	0	0.37	3.46	1.10
	REC													0	3.43	0	0.37	3.46	1.10

REF. NO.		Q3031			Q3032			Q3037		
MODE		E	C	B	E	C	B	E	C	B
PAL	PLAY	3.03	0	2.35	0.92	9.00	1.51	0	0.21	0.36
	REC	3.03	0	2.35	0.92	8.99	1.51	0	0.08	0.36
SECAM	PLAY	3.15	0	2.45	0.97	9.00	1.55	0	0.20	0.35
	REC	3.15	0	2.45	0.97	8.99	1.55	0	0.07	0.35

REF. NO.		Q8001			Q8002			Q8003			Q8004			Q8005			Q8006		
MODE		E	C	B	E	C	B	E	C	B	E	C	B	E	C	B	E	C	B
PAL	PLAY	0	0.04	0	0	0	0	0.23	3.24	0.95	2.32	8.95	3.02	2.32	8.95	0	2.51	2.47	2.23
	REC	0	0.04	0	0	0	0	0	0.02	0	2.32	8.94	3.02	2.32	8.94	0	2.51	2.48	2.23
SECAM	PLAY	0	0.01	0.72	0	0.01	0	0.23	3.23	0.95	4.19	8.95	3.24	4.19	8.95	4.90	2.52	2.45	2.25
	REC	0	0.01	0.72	0	0	0	0	0.02	0	4.18	8.95	3.24	4.18	8.95	4.89	2.52	2.54	2.25

REF. NO.		Q8007		
MODE		E	C	B
PAL	PLAY	0	0	0.61
	REC	0	0	0.61
SECAM	PLAY	0	0	0.61
	REC	0	0	0.61

Audio	
Q4001	B-2
Q4002	A-2
Q4003	A-3
Q4004	C-5
Q4005	A-5
Q4006	A-6
Q4007	A-6
Q4008	B-6
Q4009	A-4
IC4001	B-4
IC4002	D-4
IC4003	D-6

AUDIO SCHEMATIC DIAGRAM

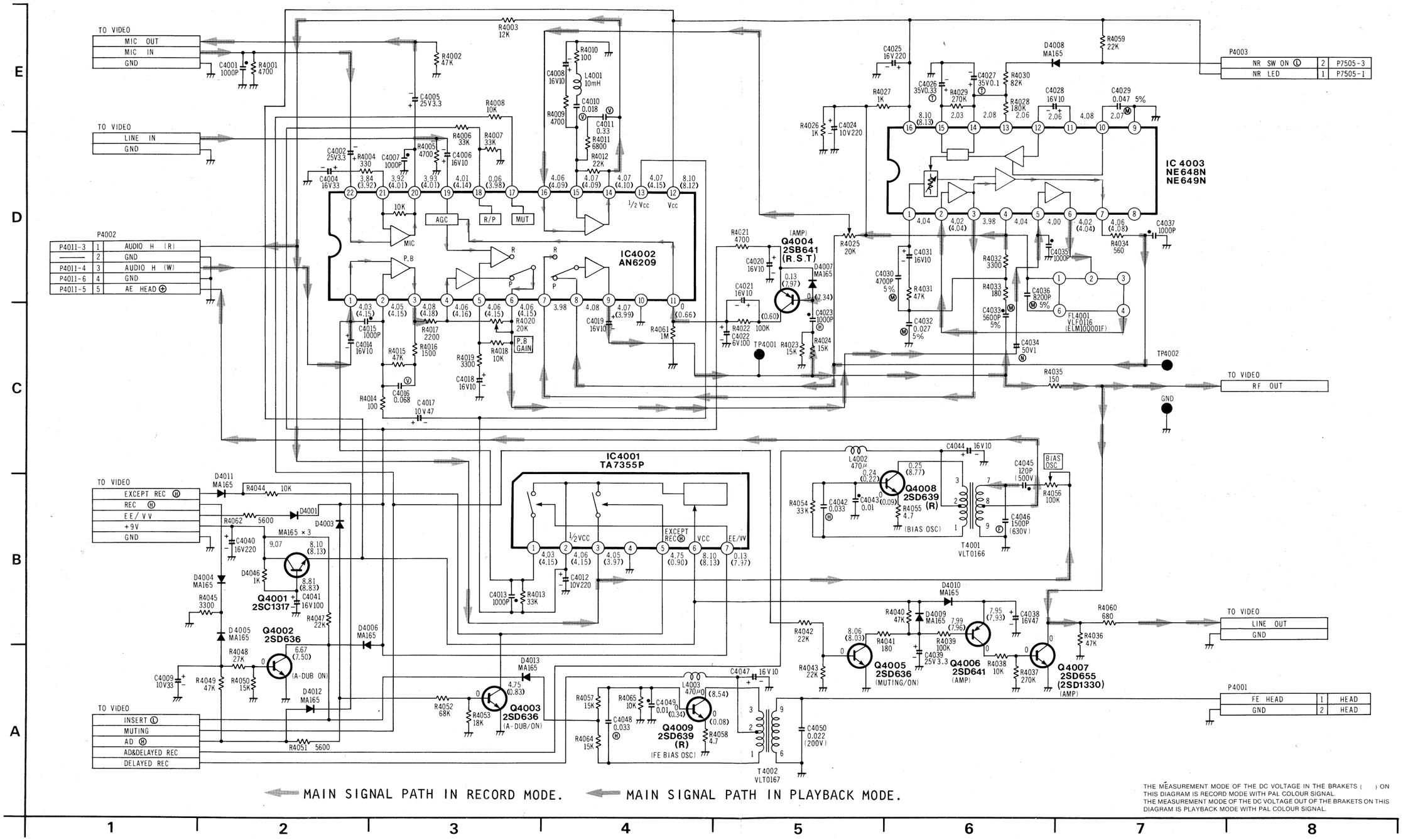

THE MEASUREMENT MODE OF THE DC VOLTAGE IN THE BRAKETS ( ) ON THIS DIAGRAM IS RECORD MODE WITH PAL COLOUR SIGNAL.
THE MEASUREMENT MODE OF THE DC VOLTAGE OUT OF THE BRAKETS ON THIS DIAGRAM IS PLAYBACK MODE WITH PAL COLOUR SIGNAL.

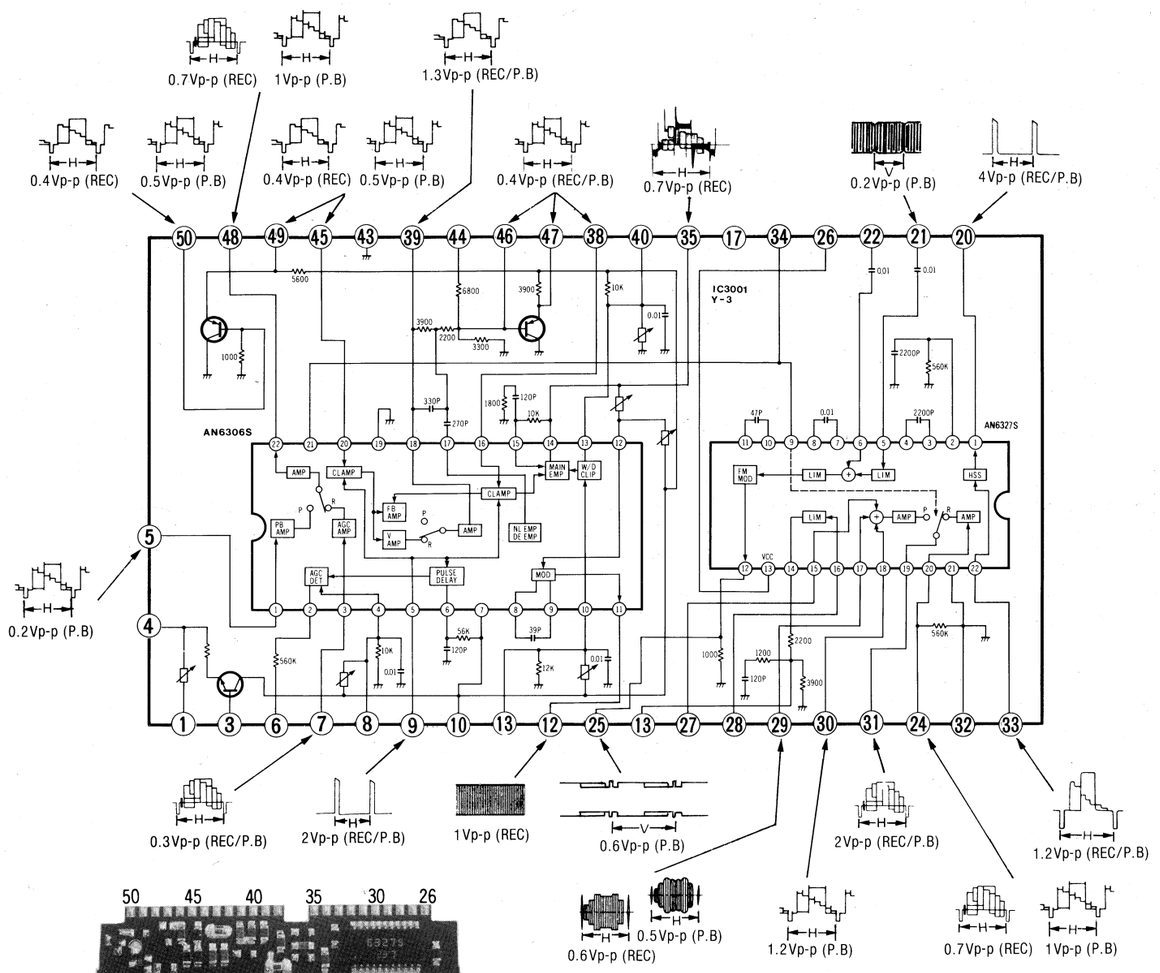

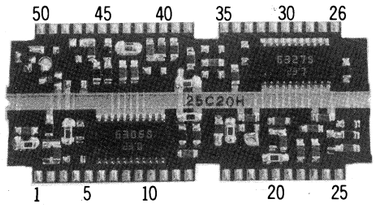

IC3001 (Y-3)

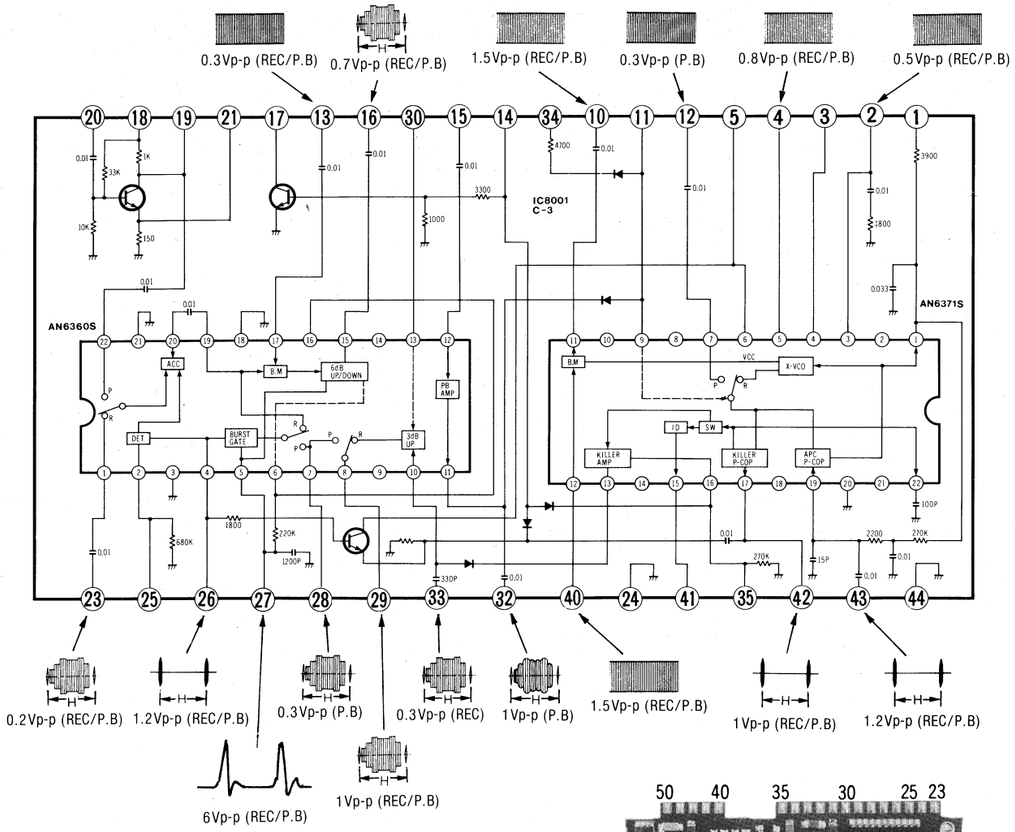

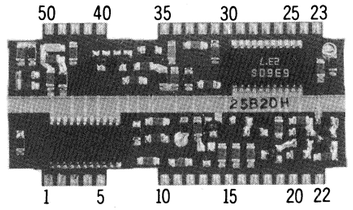

IC8001 (C-3)

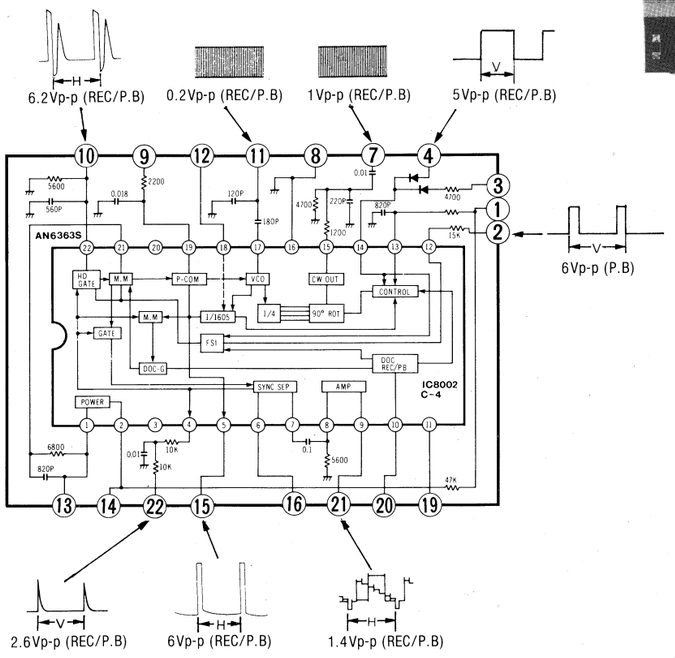

IC8002 (C-4)

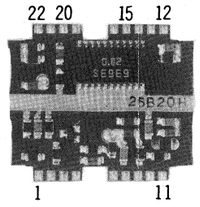

LUMINANCE, CHROMINANCE SCHEMATIC DIAGRAM

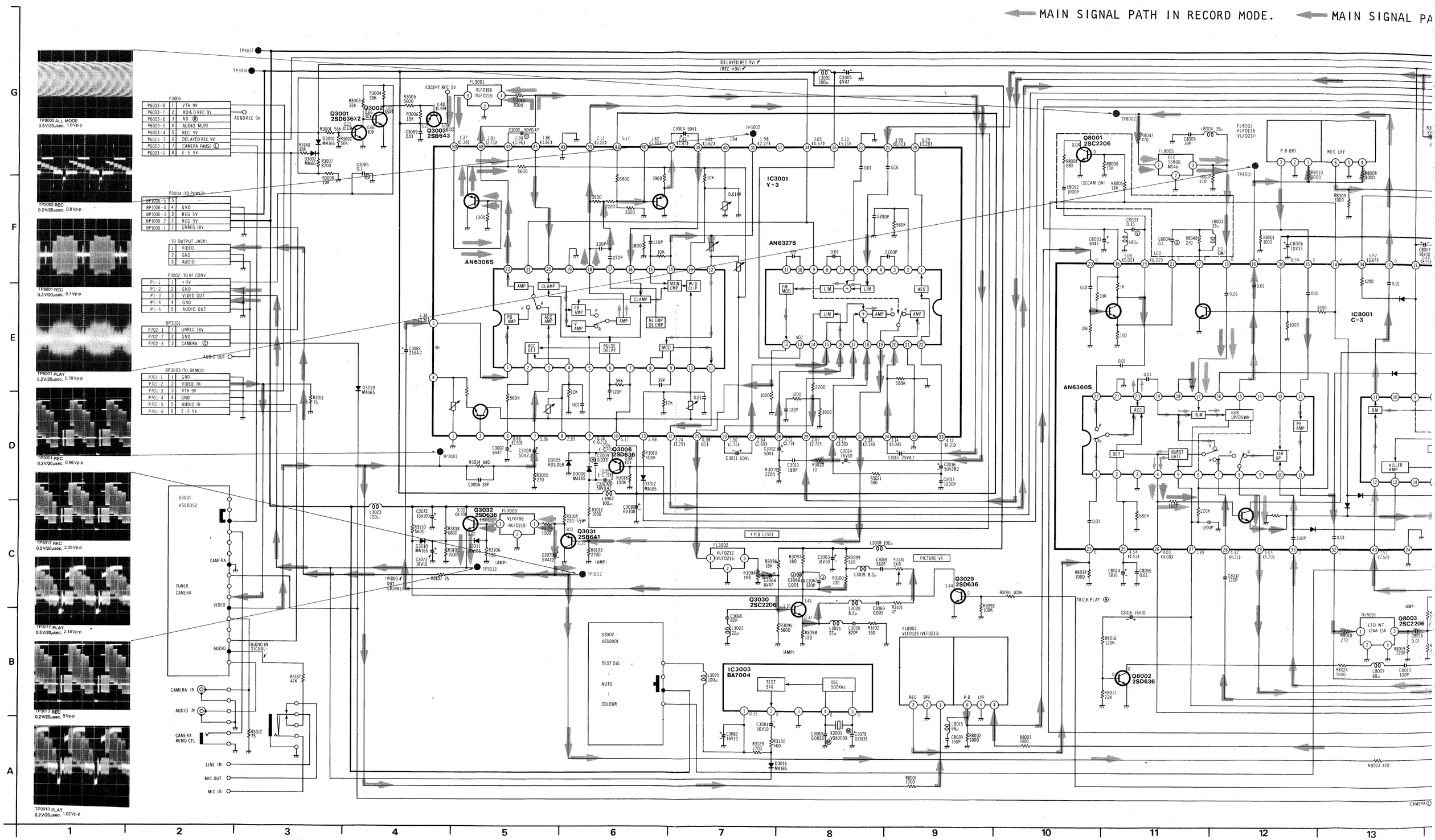

Refer to page 3-18 for the waveforms of the FICs,IC3001,IC8002 and IC8003.

ECORD MODE. ⟵ MAIN SIGNAL PATH IN PLAYBACK MODE.

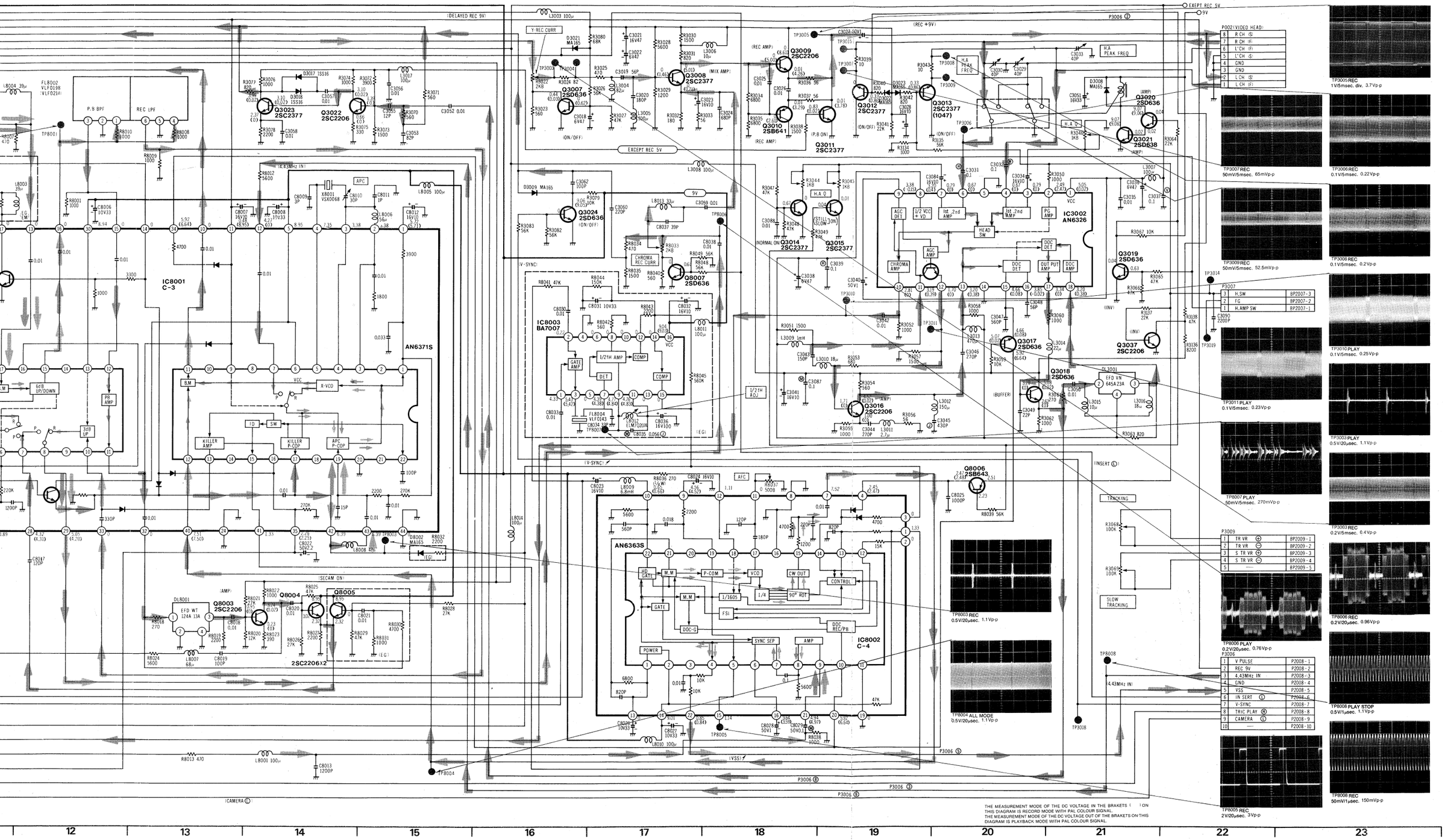

THE MEASUREMENT MODE OF THE DC VOLTAGE IN THE BRAKETS ( ) ON THIS DIAGRAM IS RECORD MODE WITH PAL COLOUR SIGNAL.
THE MEASUREMENT MODE OF THE DC VOLTAGE OUT OF THE BRAKETS ON THIS DIAGRAM IS PLAYBACK MODE WITH PAL COLOUR SIGNAL.

Luminance, Chrominance	
Luminance Section	
Q3001	G-4
Q3002	G-4
Q3003	G-4
Q3006	D-6
Q3007	G-16
Q3008	G-17
Q3009	G-18
Q3010	G-18
Q3011	G-18
Q3012	G-19
Q3013	G-19
Q3014	F-18
Q3015	F-19
Q3016	D-19
Q3017	E-20
Q3018	D-20
Q3019	E-21
Q3020	G-21
Q3021	G-21
Q3022	G-14
Q3023	G-14
Q3024	F-16
Q3029	C-9
Q3030	B-8
Q3031	C-6
Q3032	C-5
Q3037	E-21
IC3001	F-7
IC3002	E-20
IC3003	B-7
Chrominance Section	
Q8001	G-10
Q8002	B-11
Q8003	B-14
Q8004	B-14
Q8005	B-14
Q8006	C-20
Q8007	F-17
IC8001	D-13
IC8002	B-18
IC8003	D-16

TIMER OPERATION BOARD (VEP07148A)

Timer Operation C.B.A	
Q7501	A-4
Q7502	A-4
Q7503	A-4

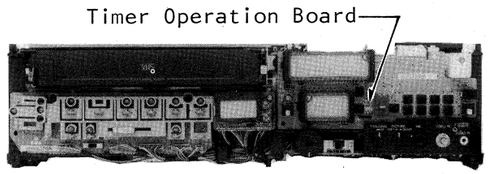

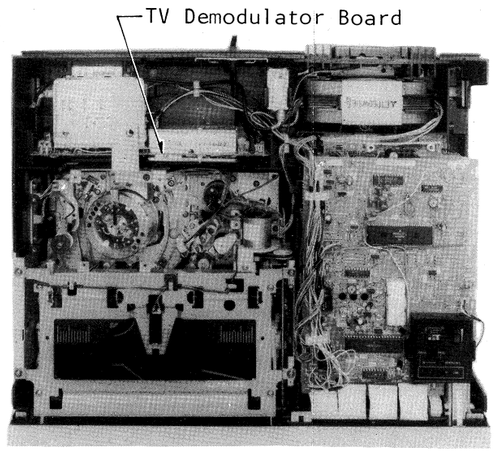

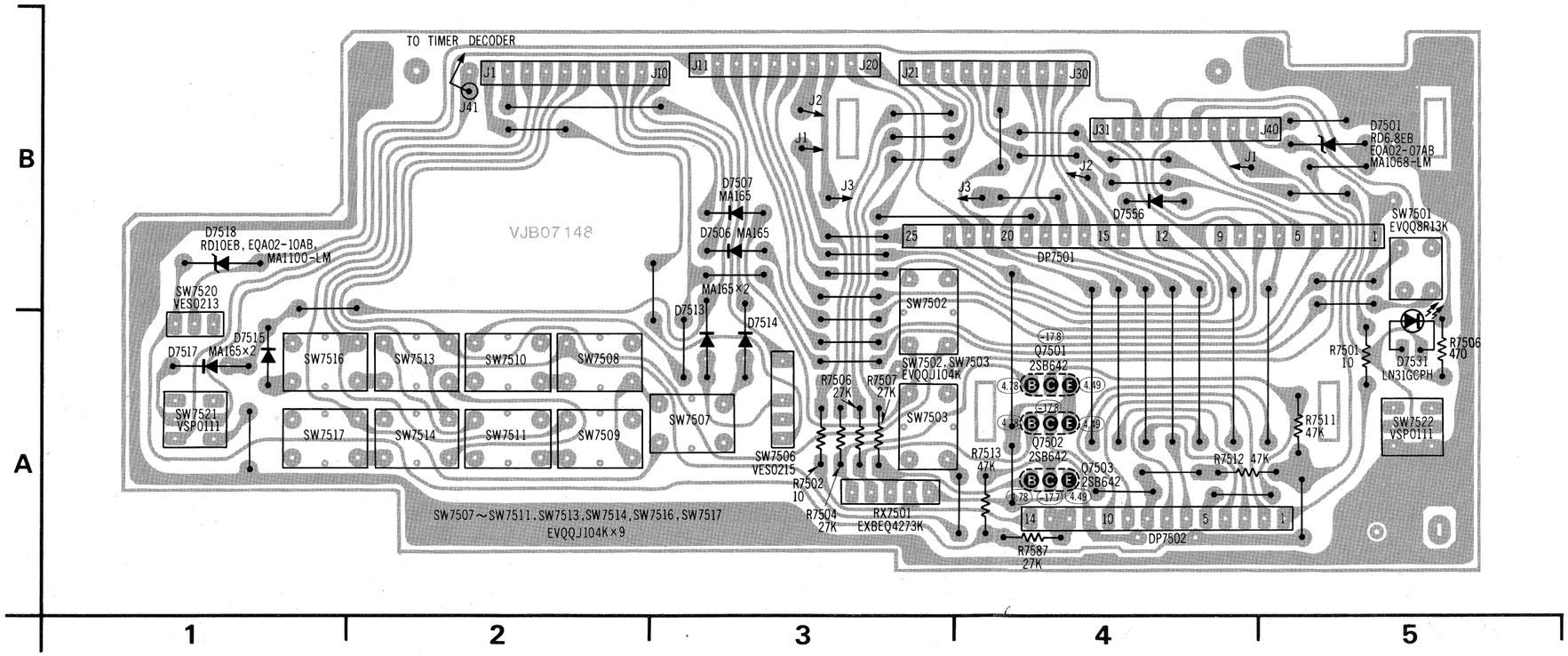

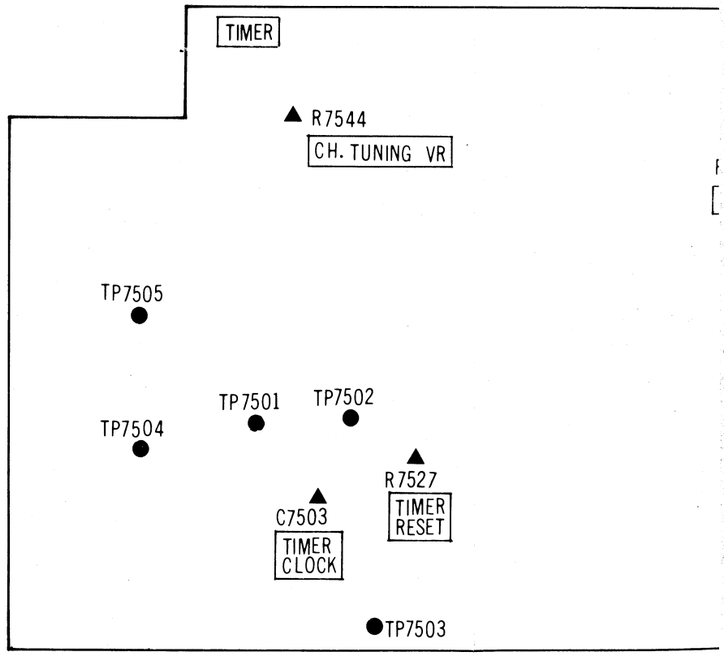

TIMER DECODER BOARD (VEP07147A: NV-777E, EG)

odulator Board

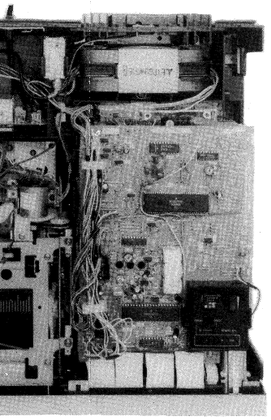

Timer Decoder C.B.A	
Q7504	C-2
Q7505	C-3
Q7506	C-3
Q7508	C-4
Q7509	C-5
Q7511	B-6
Q7512	B-5
Q7515	B-5
Q7517	B-6
Q7518	B-6
Q7519	D-3
IC7501	D-4
IC7502	C-4
IC7503	C-2
IC7504	C-1
IC7505	D-6
IC7506	E-5

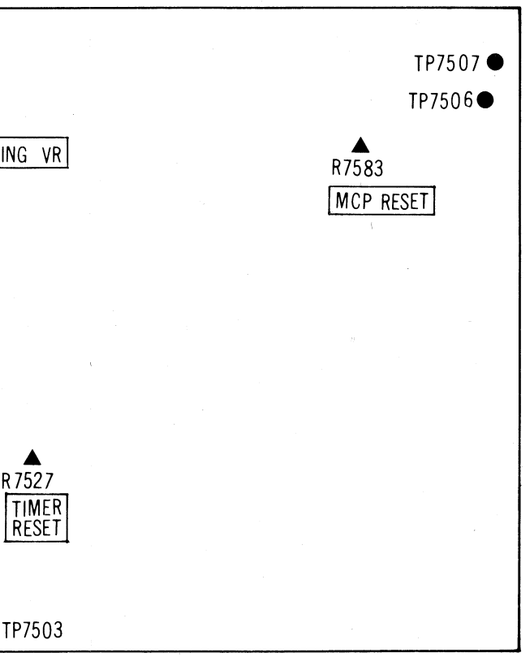

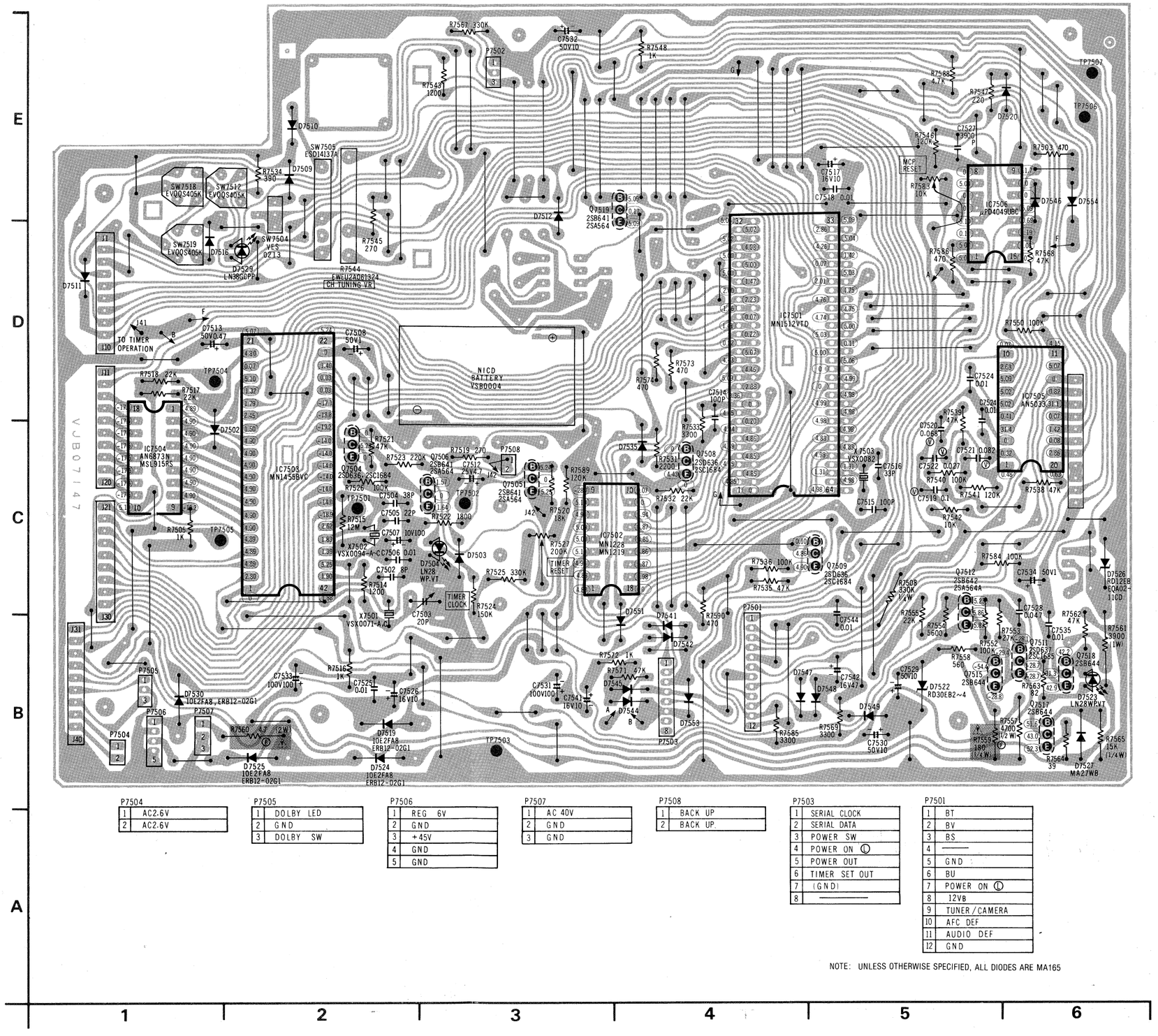

Timer Decorder & Timer Operation	
Timer Operation Section	
Q7501	E-3
Q7502	E-4
Q7503	E-4
Timer Decoder Section	
Q7504	B-7
Q7505	C-8
Q7506	B-8
Q7508	C-11
Q7509	G-18
Q7511	B-20
Q7512	A-19
Q7515	B-21
Q7517	C-21
Q7518	C-20
Q7519	G-17
IC7501	F-15
IC7502	D-9
IC7503	D-4
IC7504	D-1
IC7505	C-18
IC7506	D-19

P7504

1	AC2.6V
2	AC2.6V

P7505

1	DOLBY LED
2	GND
3	DOLBY SW

P7506

1	REG 6V
2	GND
3	+45V
4	GND
5	GND

P7507

1	AC 40V
2	GND
3	GND

P7508

1	BACK UP
2	BACK UP

P7503

1	SERIAL CLOCK
2	SERIAL DATA
3	POWER SW
4	POWER ON Ⓛ
5	POWER OUT
6	TIMER SET OUT
7	(GND)
8	———

P7501

1	BT
2	BV
3	BS
4	———
5	GND
6	BU
7	POWER ON Ⓛ
8	12VB
9	TUNER/CAMERA
10	AFC DEF
11	AUDIO DEF
12	GND

NOTE: UNLESS OTHERWISE SPECIFIED, ALL DIODES ARE MA165

TIMER DECODER & TIMER OPERATION SCHEMATIC DIAGRAM (NV-777E, EG)

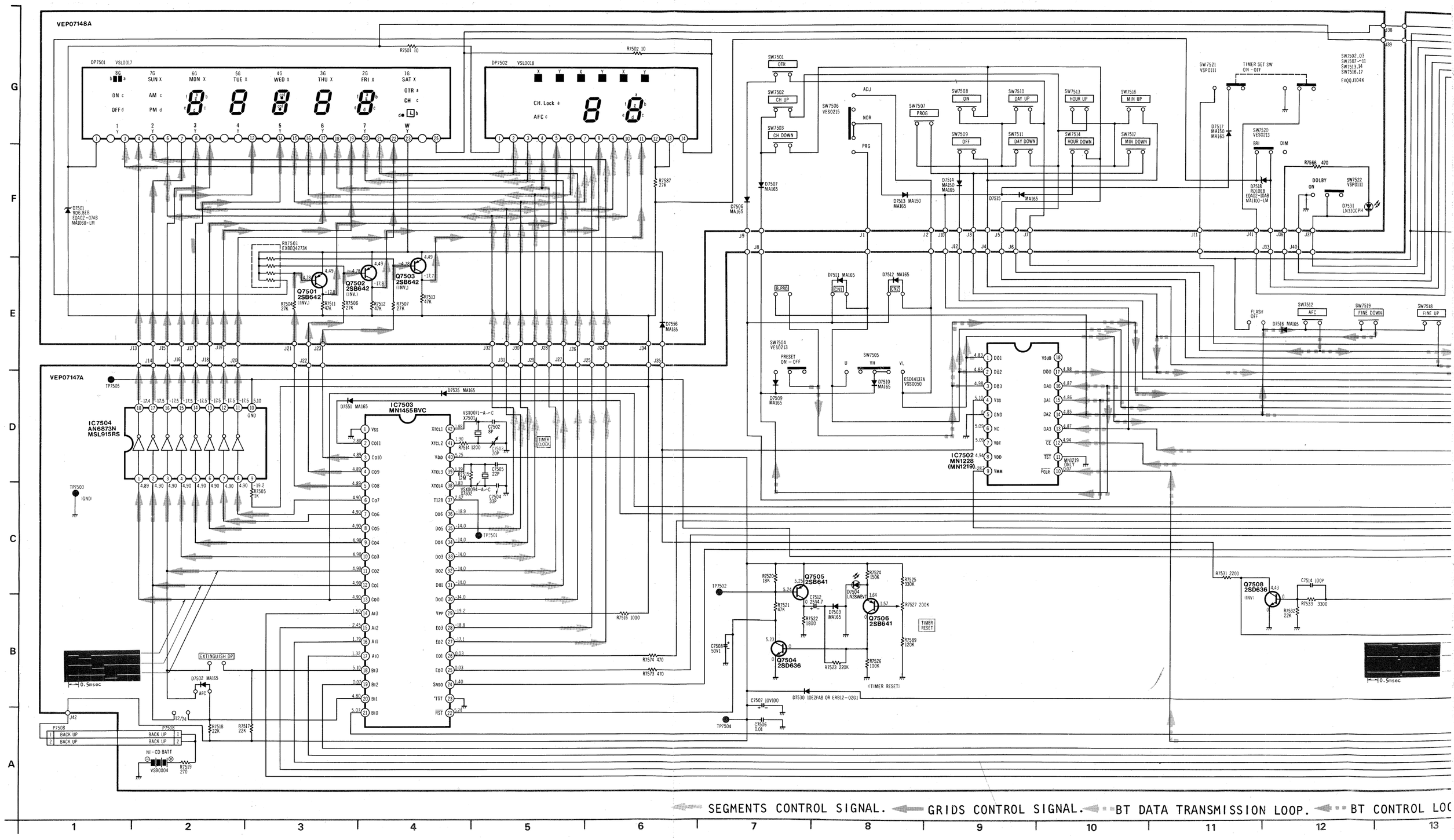

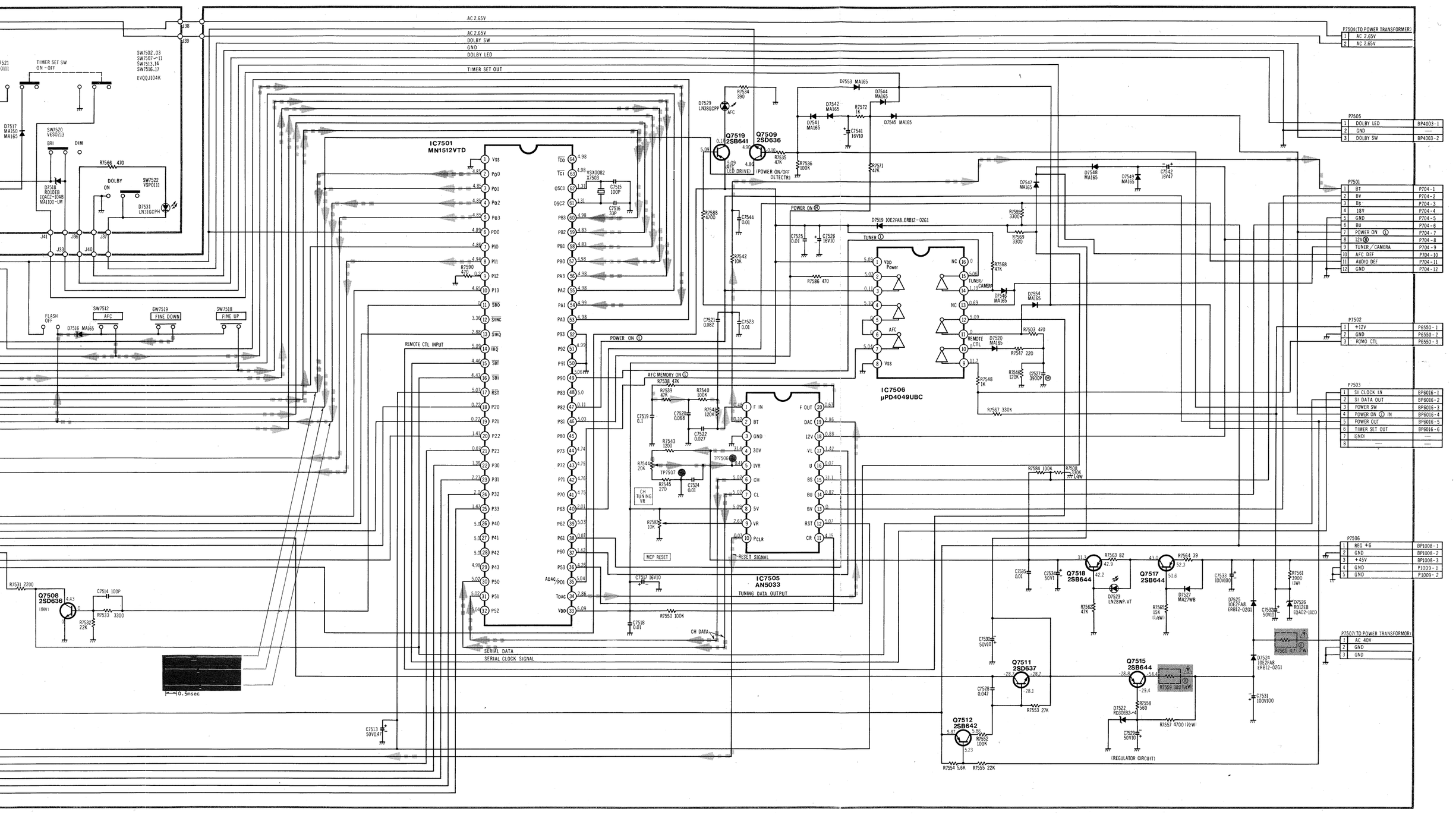

SMISSION LOOP. BT CONTROL LOOP.

11 12 13 14 15 16 17 18 19 20 21 22 23

TIMER DECODER & TIMER OPERATION SCHEMATIC DIAGRAM (NV-777B)

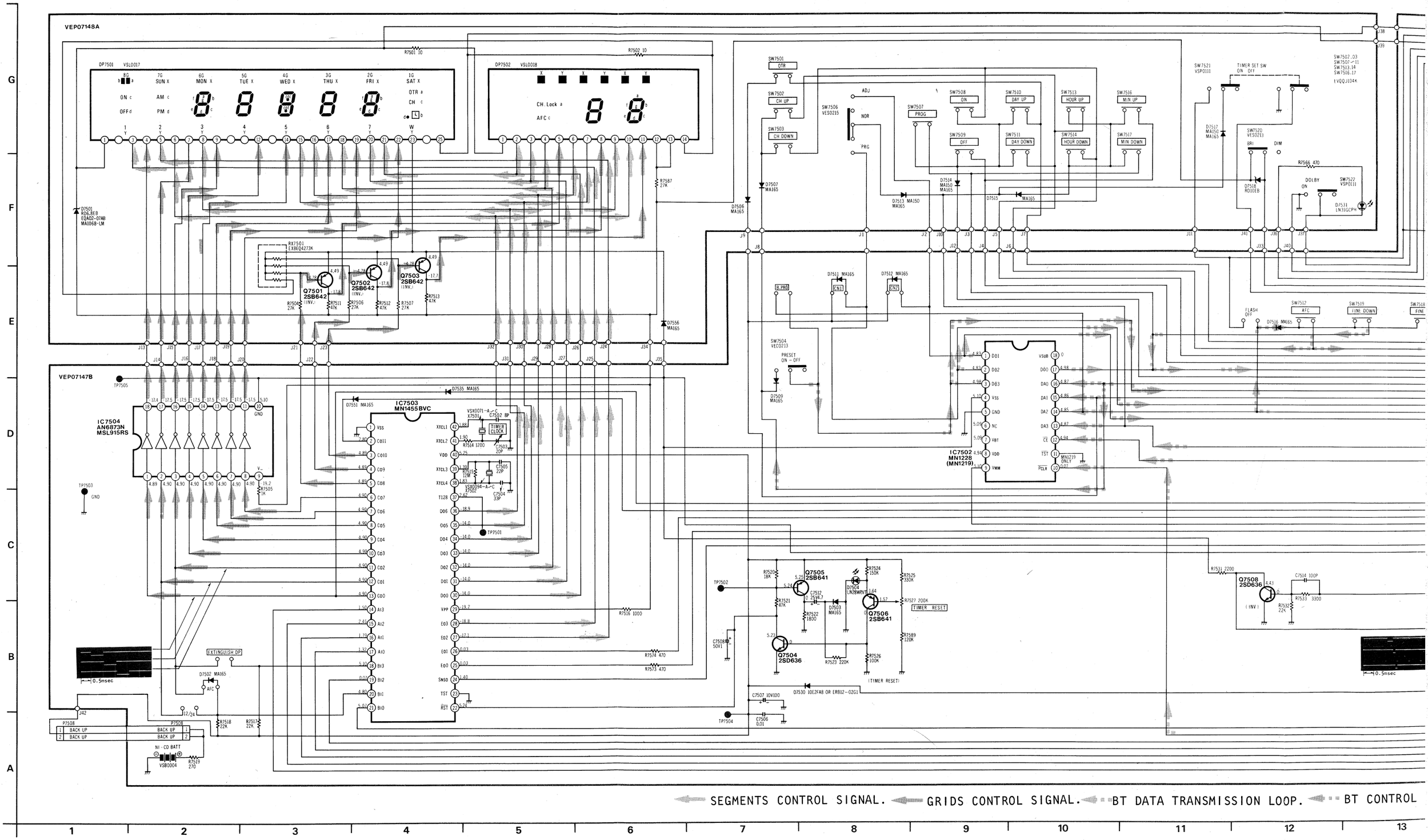

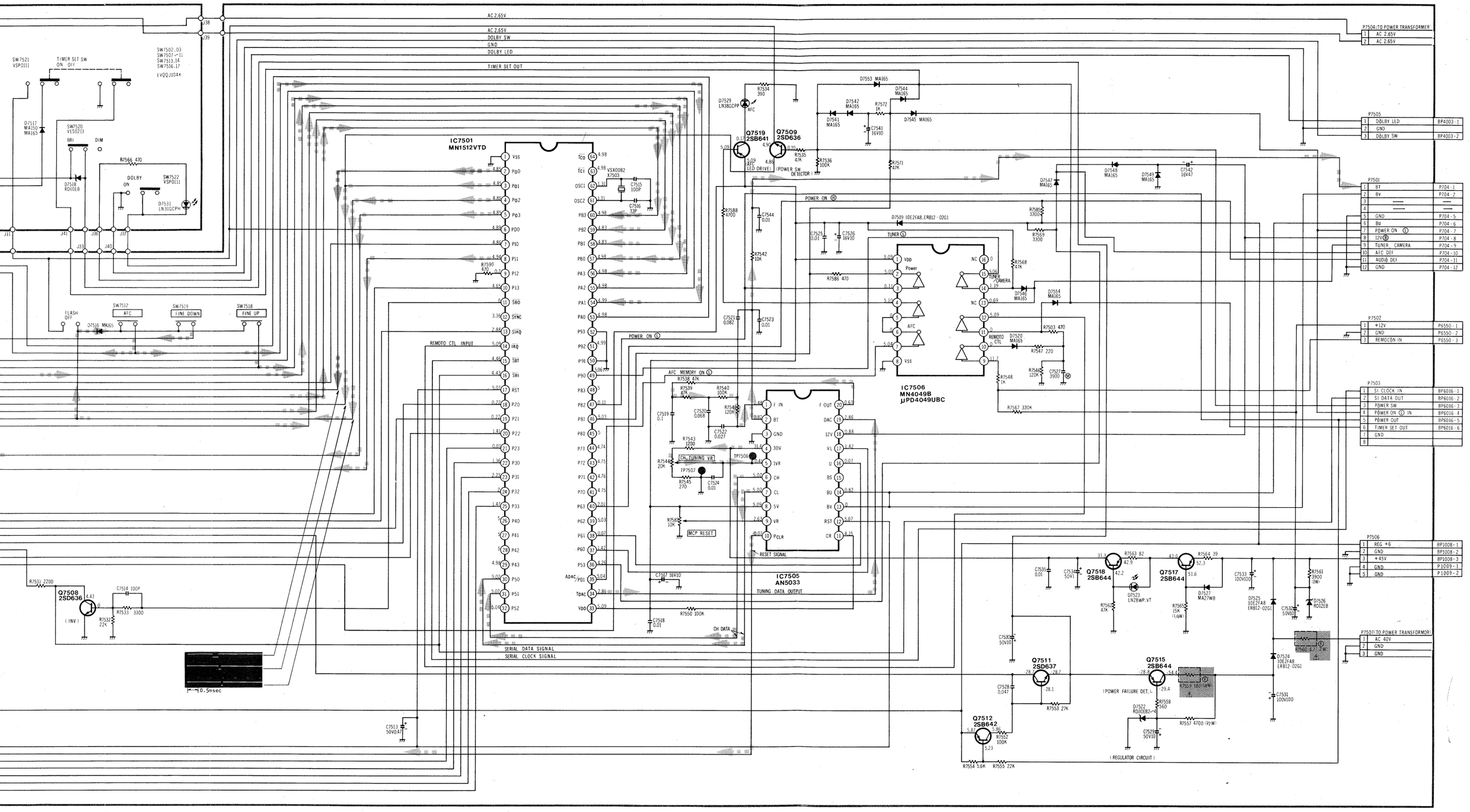

RANSMISSION LOOP. BT CONTROL LOOP.

Timer Decorder & Timer Operation	
Timer Operation Section	
Q7501	E-3
Q7502	E-4
Q7503	E-4
Timer Decoder Section	
Q7504	B-7
Q7505	C-8
Q7506	B-8
Q7508	C-11
Q7509	G-18
Q7511	B-20
Q7512	A-19
Q7515	B-21
Q7517	C-21
Q7518	C-20
Q7519	G-17
IC7501	F-15
IC7502	D-9
IC7503	D-4
IC7504	D-1
IC7505	C-18
IC7506	D-19

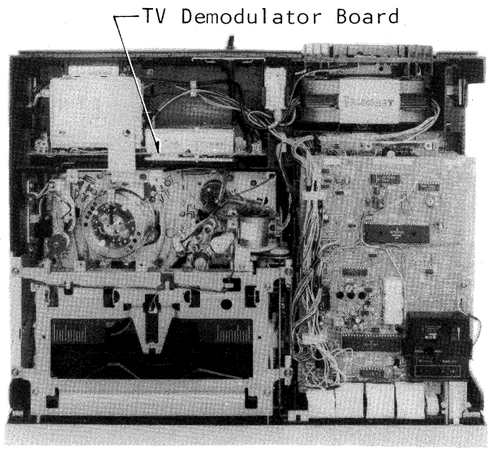

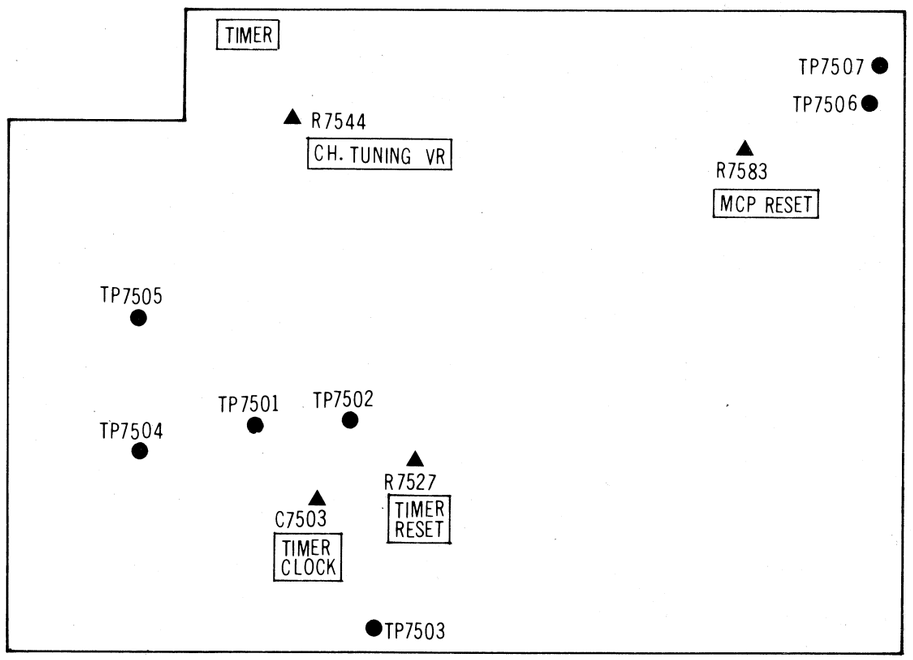

Timer Decoder C.B.A	
Q7504	C-2
Q7505	C-3
Q7506	C-3
Q7508	C-4
Q7509	C-5
Q7511	B-6
Q7512	B-5
Q7515	B-5
Q7517	B-6
Q7518	B-6
Q7519	D-3
IC7501	D-4
IC7502	C-4
IC7503	C-2
IC7504	C-1
IC7505	D-6
IC7506	E-5

TIMER DECODER BOARD (VEP07147B: NV-777B)

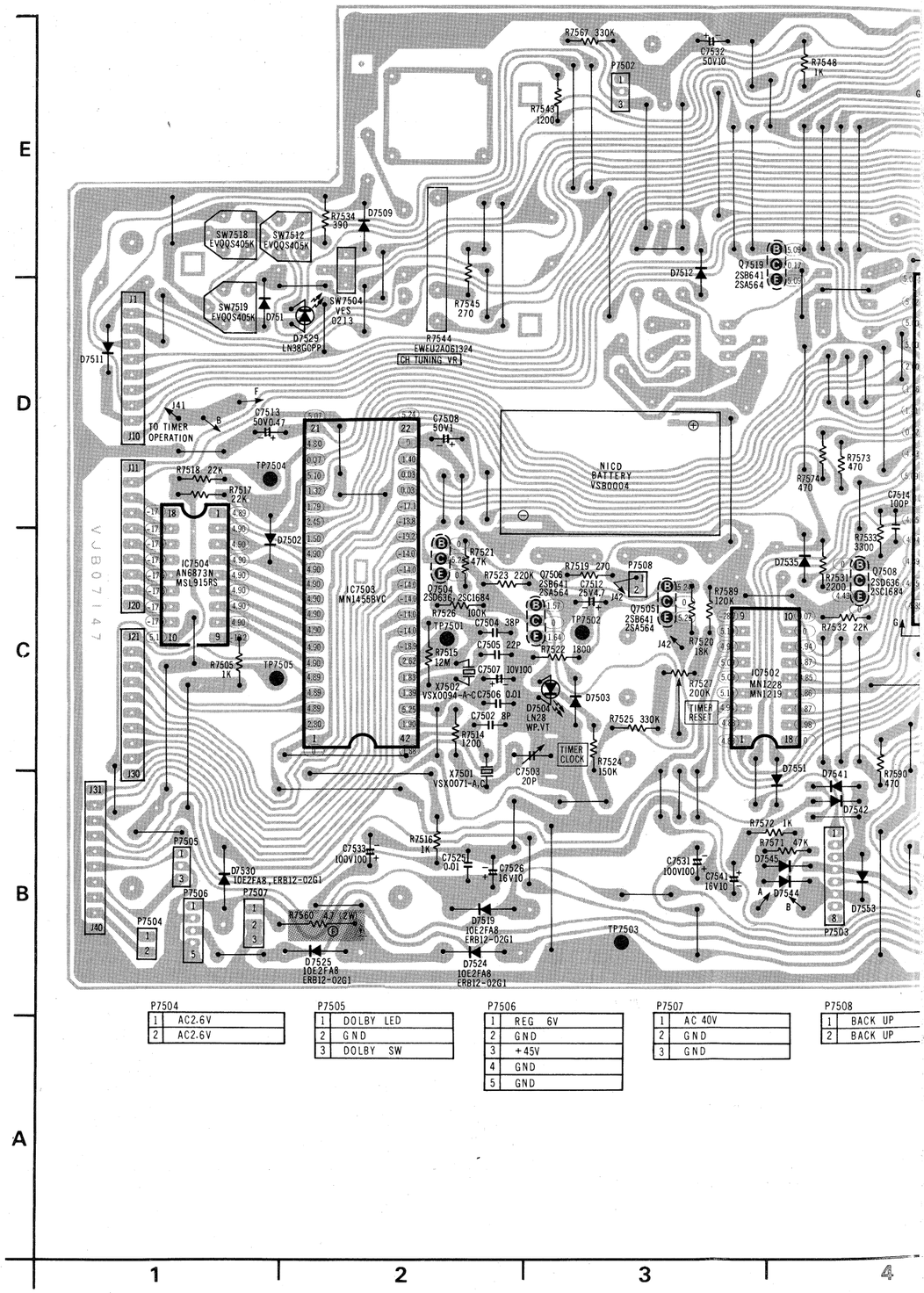

P7504	
1	AC2.6V
2	AC2.6V

P7505	
1	DOLBY LED
2	GND
3	DOLBY SW

P7506	
1	REG 6V
2	GND
3	+45V
4	GND
5	GND

P7507	
1	AC 40V
2	GND
3	GND

P7508	
1	BACK UP
2	BACK UP

TIMER DECODER BOARD (VEP07147B: NV-777B)

Timer Decoder C.B.A	
Q7504	C-2
Q7505	C-3
Q7506	C-3
Q7508	C-4
Q7509	C-5
Q7511	B-6
Q7512	B-5
Q7515	B-5
Q7517	B-6
Q7518	B-6
Q7519	D-3
IC7501	D-4
IC7502	C-4
IC7503	C-2
IC7504	C-1
IC7505	D-6
IC7506	E-5

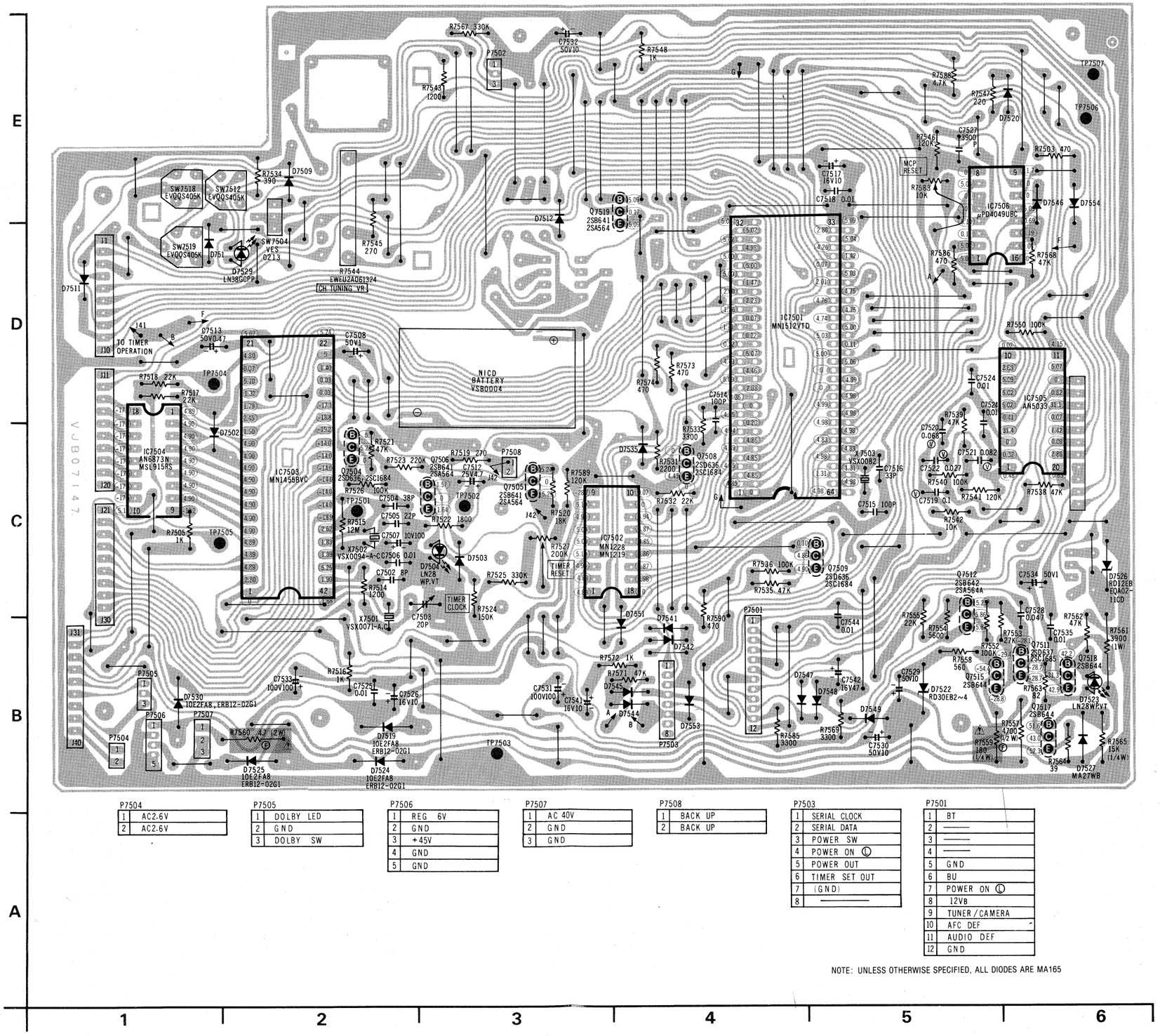

P7504	
1	AC2.6V
2	AC2.6V

P7505	
1	DOLBY LED
2	GND
3	DOLBY SW

P7506	
1	REG 6V
2	GND
3	+45V
4	GND
5	GND

P7507	
1	AC 40V
2	GND
3	GND

P7508	
1	BACK UP
2	BACK UP

P7503	
1	SERIAL CLOCK
2	SERIAL DATA
3	POWER SW
4	POWER ON Ⓛ
5	POWER OUT
6	TIMER SET OUT
7	(GND)
8	——

P7501	
1	BT
2	——
3	——
4	——
5	GND
6	BU
7	POWER ON Ⓛ
8	12VB
9	TUNER / CAMERA
10	AFC DEF
11	AUDIO DEF
12	GND

NOTE: UNLESS OTHERWISE SPECIFIED, ALL DIODES ARE MA165

TV DEMODULATOR SCHEMATIC DIAGRAM (NV-777E, EG)

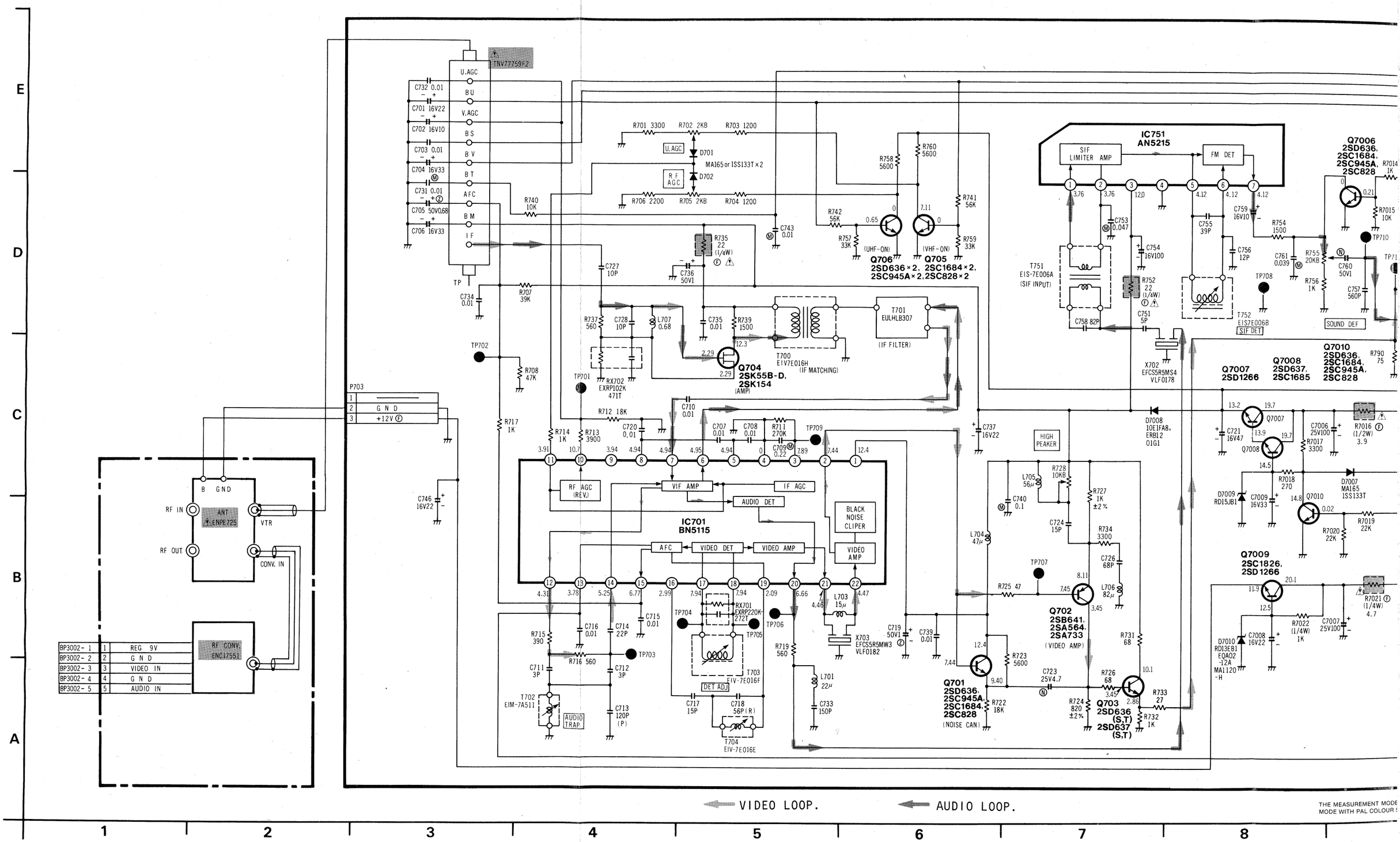

THE MEASUREMENT MODE
MODE WITH PAL COLOUR

V-777E, EG)

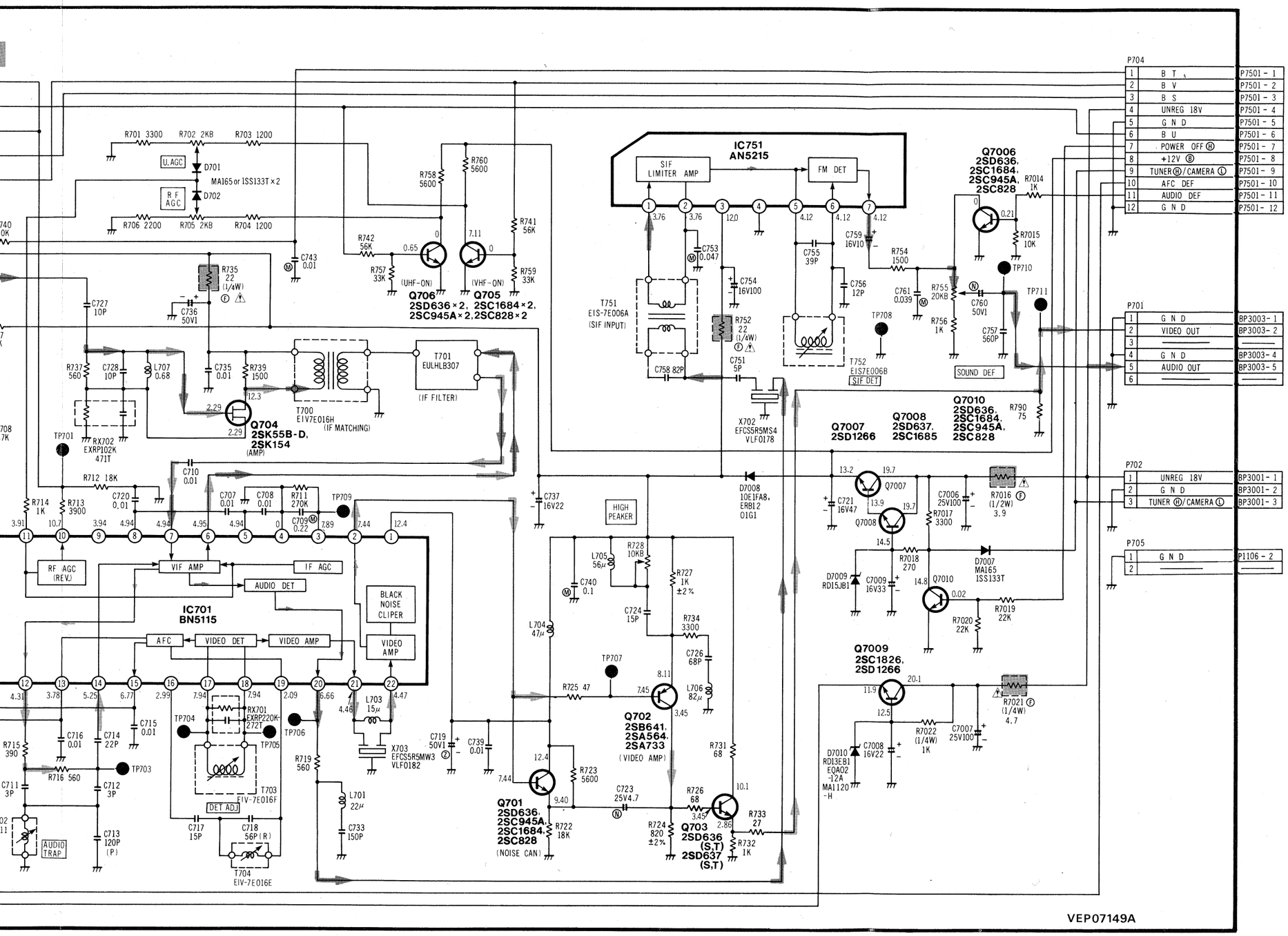

TV Demoludator (NV-777E, EG)	
Q701	A-6
Q702	B-7
Q703	A-7
Q704	C-5
Q705	D-6
Q706	D-6
Q7006	D-9
Q7007	C-8
Q7008	C-8
Q7009	B-8
Q7010	B-8
IC701	B-5
IC751	E-7

VIDEO LOOP. AUDIO LOOP.

THE MEASUREMENT MODE OF THE D.C. VOLTAGE ON THIS DIAGRAM IS STOP MODE WITH PAL COLOUR SIGNAL.

4 5 6 7 8 9 10

TV DEMODULATOR BOARD (VEP07149A: NV-777E, EG)

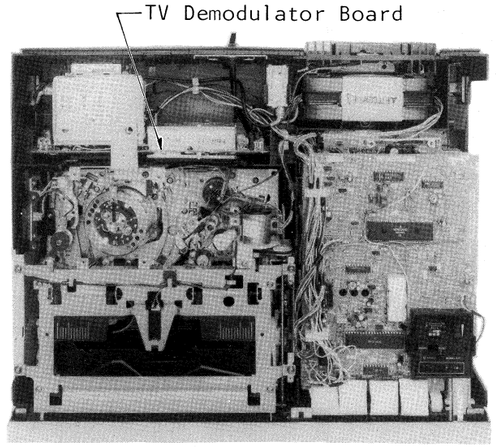

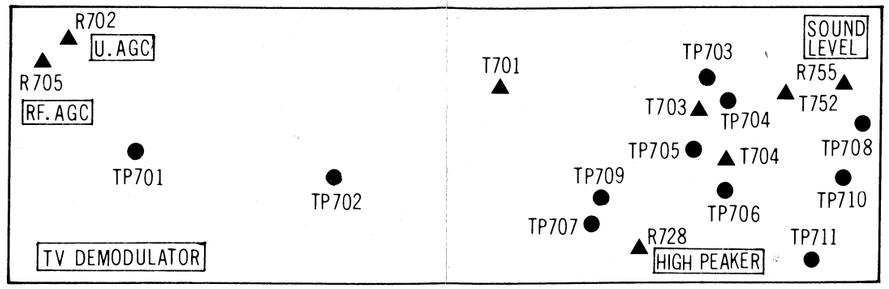

TV Demodulator C.B.A (NV-777E, EG)	
Q701	B-4
Q702	B-4
Q703	B-5
Q704	C-4
Q705	C-2
Q706	C-1
Q7006	C-6
Q7007	B-1
Q7008	B-1
Q7009	B-2
Q7010	B-2
IC701	B-4
IC751	B-6

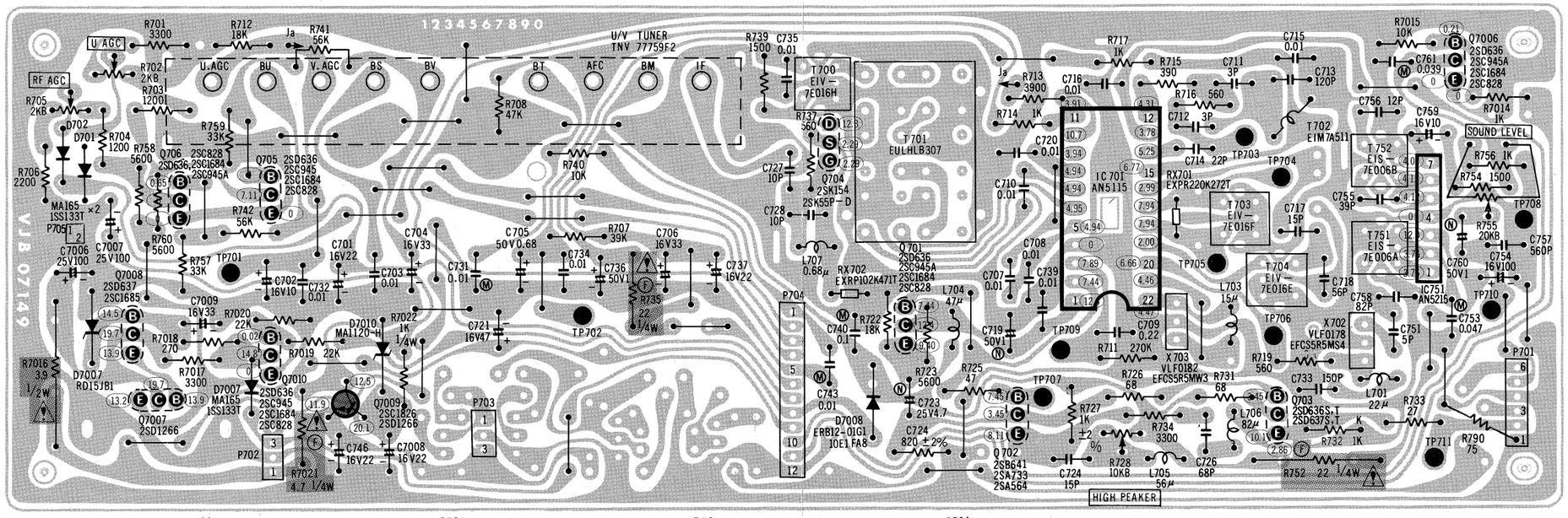

P705

1	GND
2	———

P702

1	UN REG 18V
2	GND
3	TUNER Ⓗ/CAMERA Ⓛ

P703

1	———
2	GND
3	12V + Ⓕ

P704

1	BT
2	BV
3	BS
4	UN REG 18V
5	GND
6	BU
7	POWER OFF Ⓗ
8	+12V Ⓑ
9	TUNER Ⓗ/CAMERA Ⓛ
10	AFC DEF
11	AUDIO DEF
12	GND

P701

1	GND
2	VIDEO OUT
3	———
4	GND
5	AUDIO OUT
6	———

TV DEMODULATOR BOARD (VEP07149B : NV-777B)

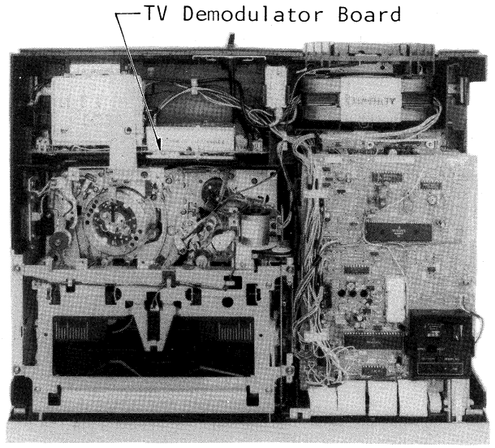

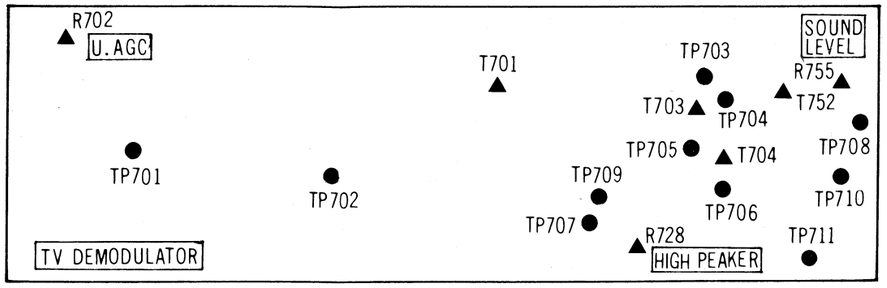

TV Demodulator C.B.A (NV-777B)	
Q701	B-4
Q702	B-4
Q703	B-5
Q704	C-4
Q707	B-3
Q709	B-2
Q7006	C-6
Q7007	B-1
Q7008	B-1
Q7009	B-2
Q7010	B-1
IC701	B-4
IC751	B-6

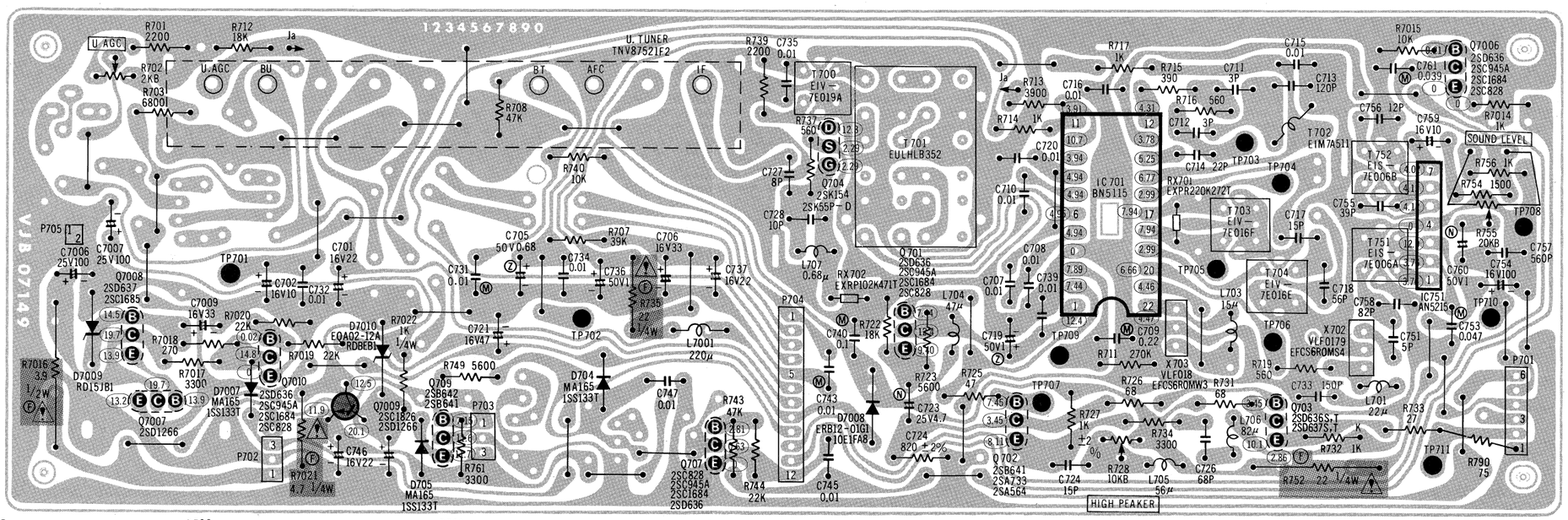

P705

1	GND
2	———

P702

1	UN REG 18V
2	GND
3	TUNER Ⓗ/CAMERA Ⓛ

P703

1	ANT BS
2	GND
3	+ 12V Ⓕ

P704

1	BT
2	———
3	———
4	———
5	GND
6	BU
7	POWER OFF Ⓗ
8	+12V Ⓑ
9	TUNER Ⓗ/CAMERA Ⓛ
10	AFC DEF
11	AUDIO DEF
12	GND

P701

1	GND
2	VIDEO OUT
3	———
4	GND
5	AUDIO OUT
6	EE Ⓗ

TV DEMODULATOR SCHEMATIC DIAGRAM (NV-777B)

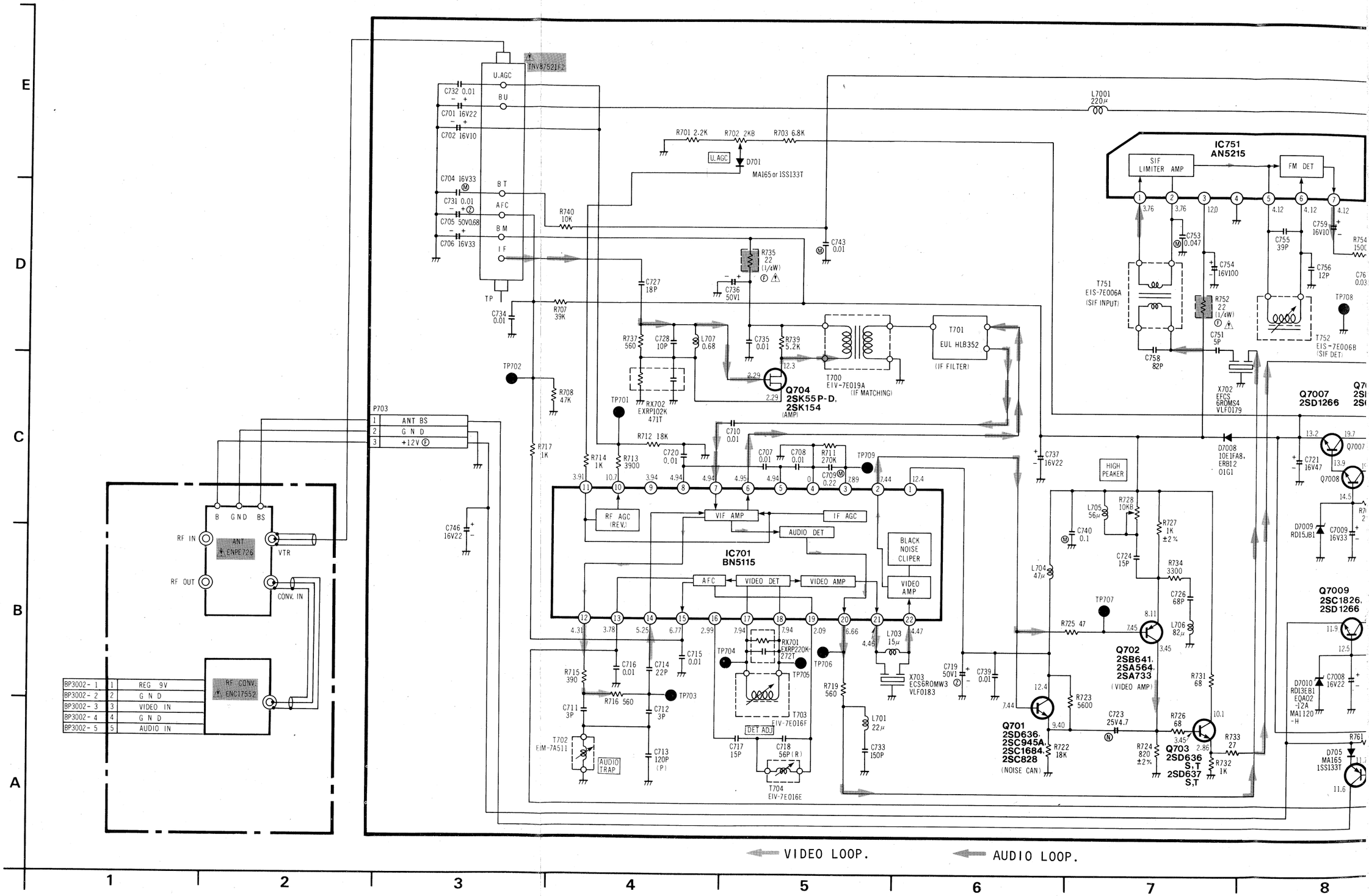

C DIAGRAM (NV-777B)

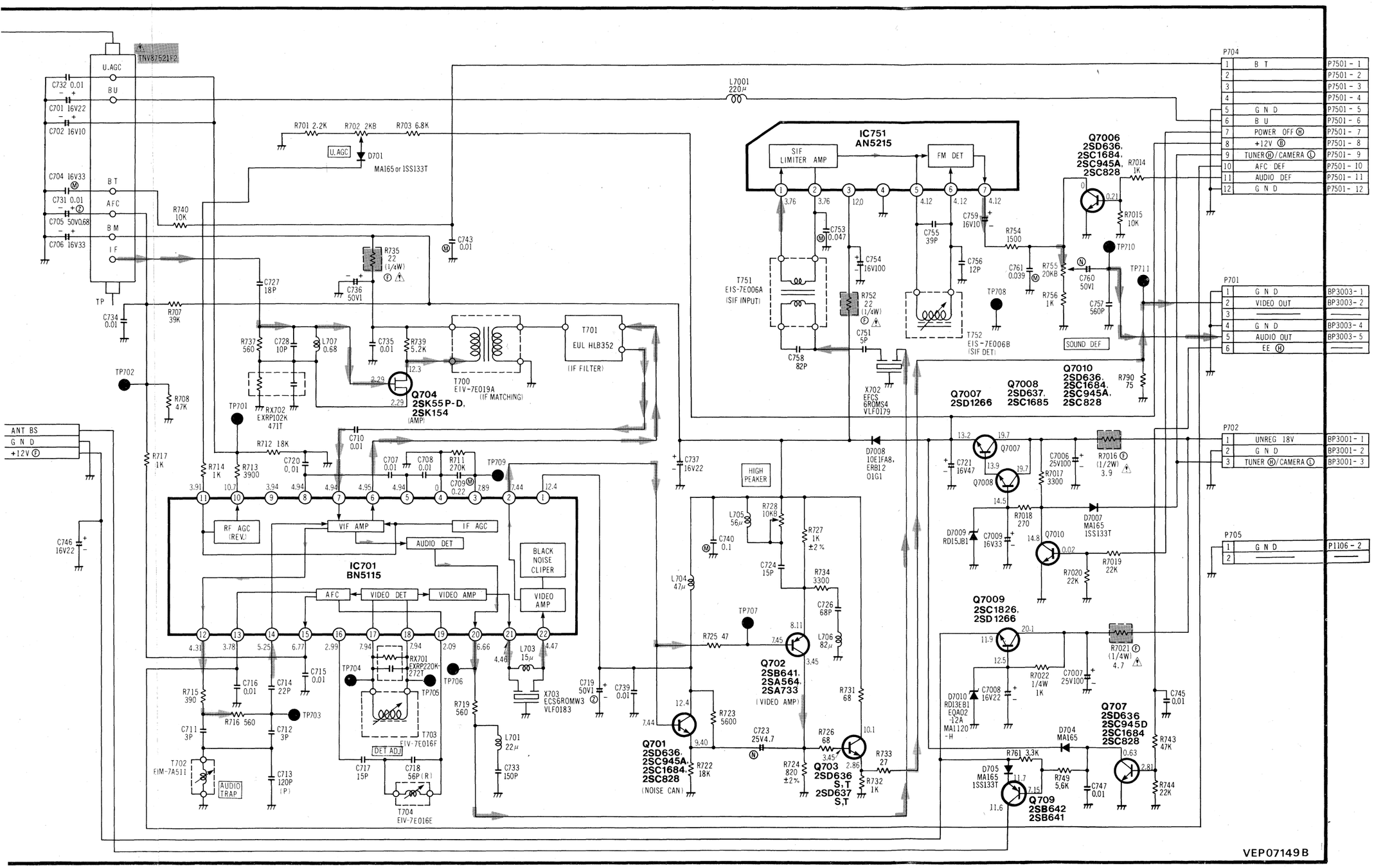

TV Denodulator (NV-777B)	
Q701	A-6
Q702	B-7
Q703	A-7
Q704	C-5
Q707	A-9
Q709	A-8
Q7006	D-9
Q7007	C-8
Q7008	C-8
Q7009	B-8
Q7010	B-8
IC701	B-5
IC751	E-7

VIDEO LOOP. AUDIO LOOP.

THE MEASUREMENT MODE OF THE D.C. VOLTAGE ON THIS DIAGRAM IS STOP MODE WITH PAL COLOUR SIGNAL.

3 | 4 | 5 | 6 | 7 | 8 | 9 | 10

RF CONVERTER SCHEMATIC DIAGRAM (NV-777E, EG)

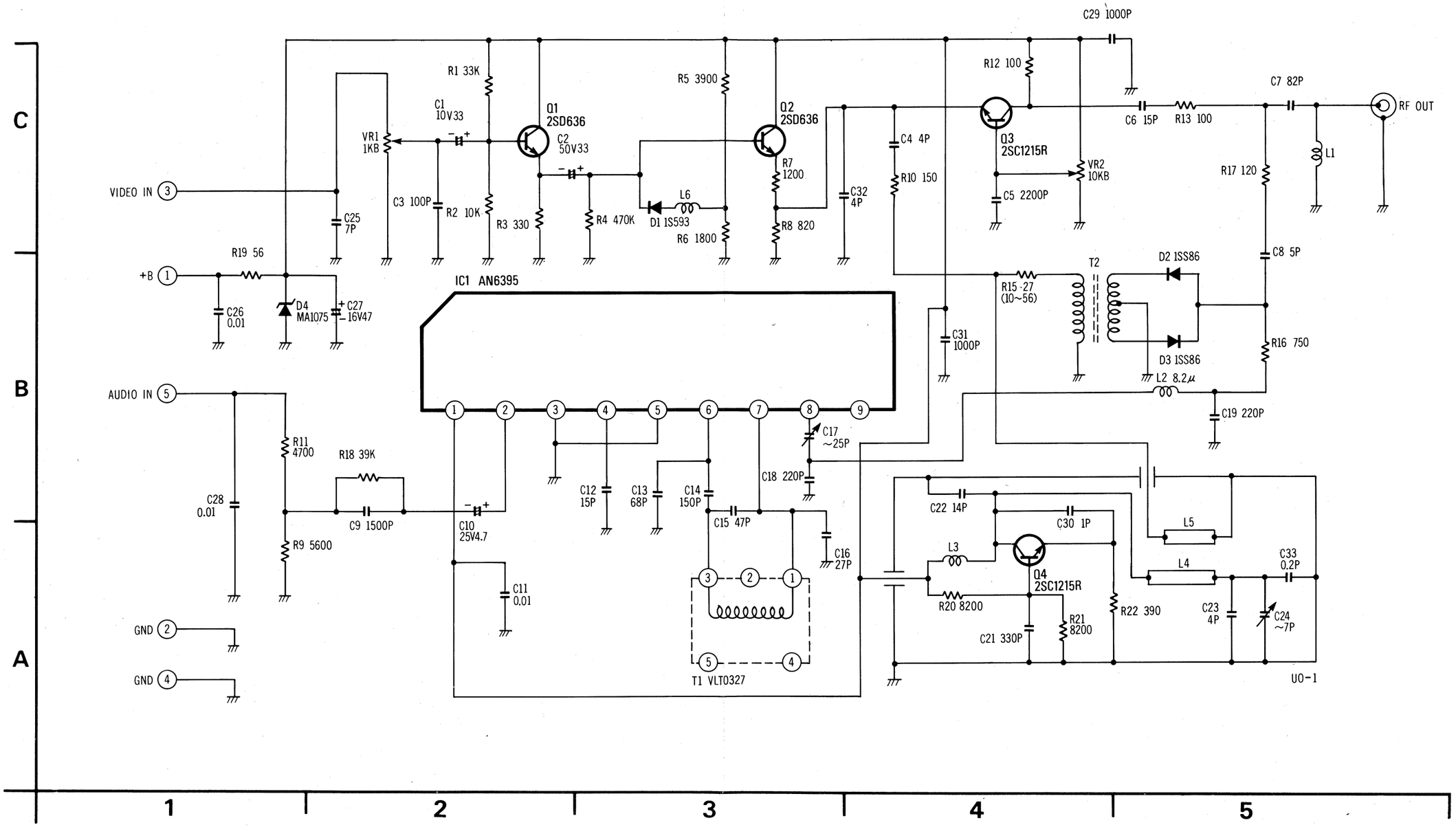

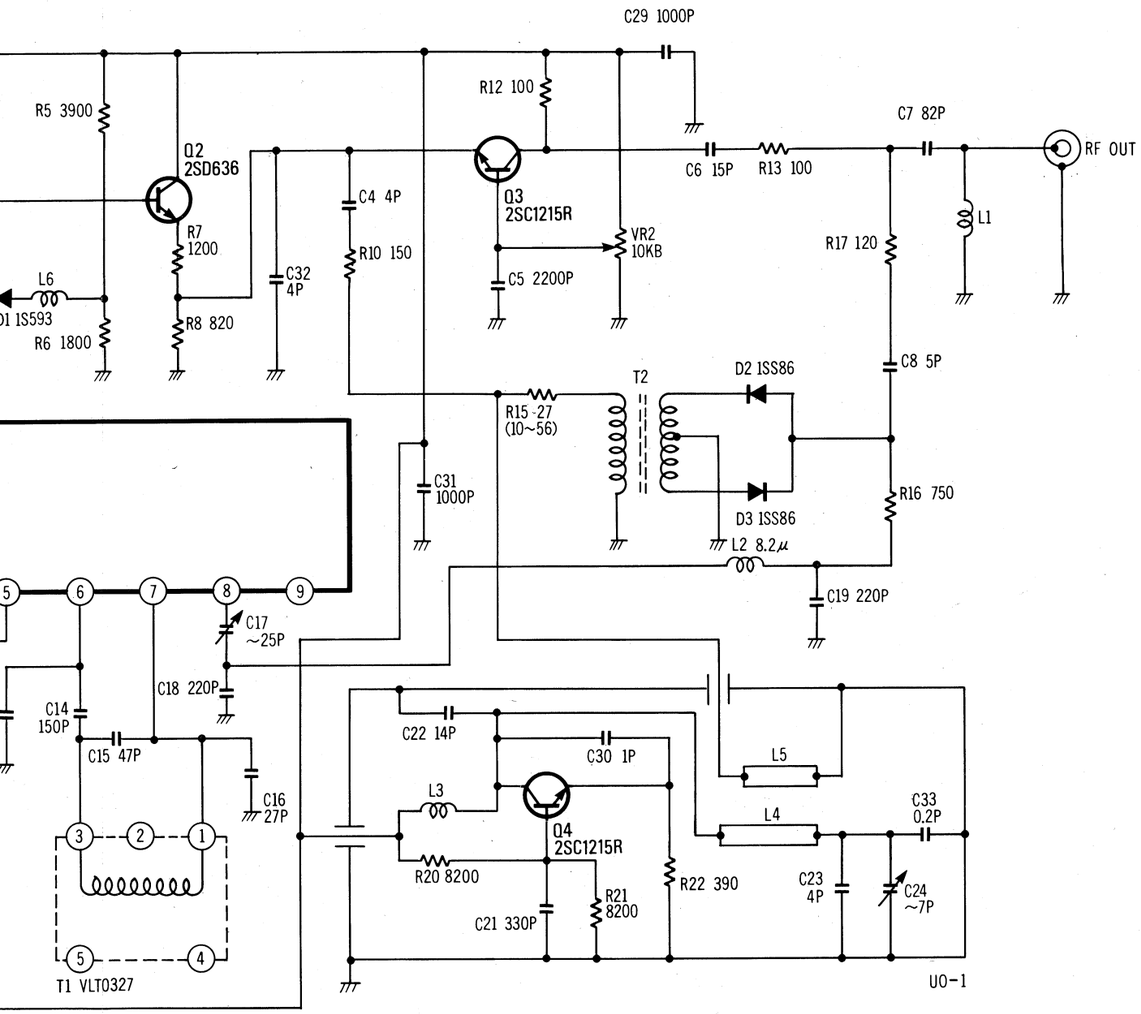

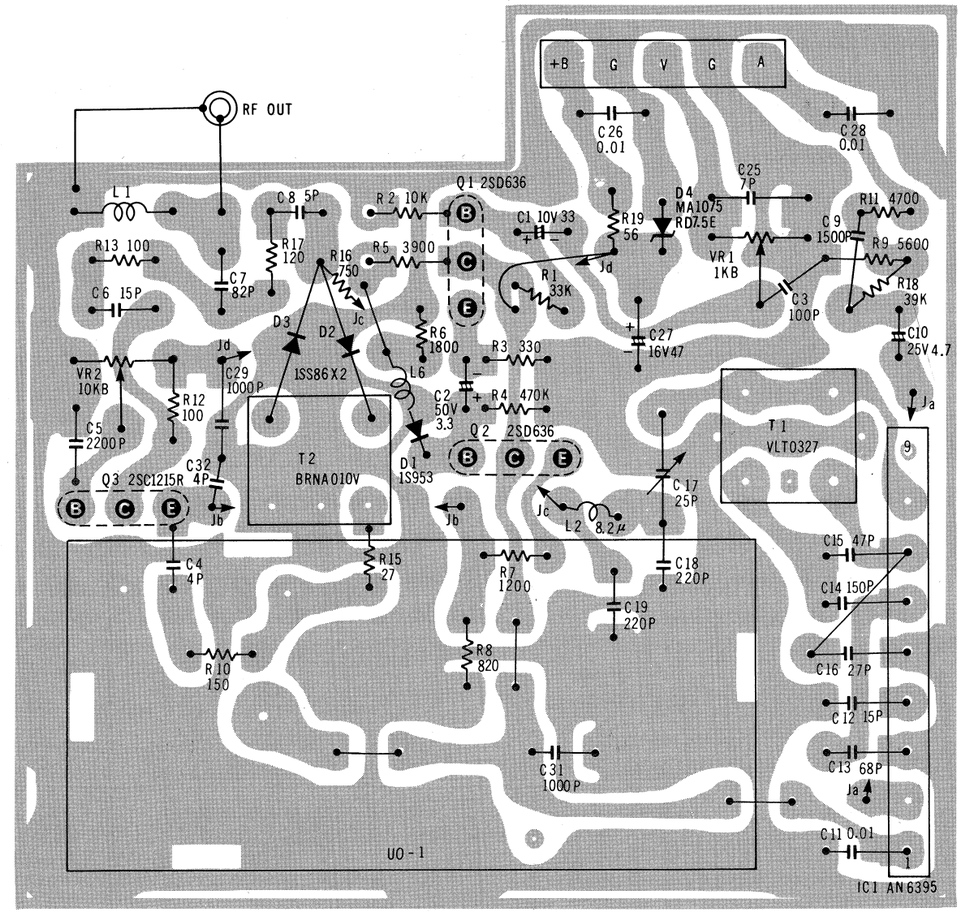

NOTE: The Chip Parts are coloured Blue.

RF CONVERTER SCHEMATIC DIAGRAM (NV-777B)

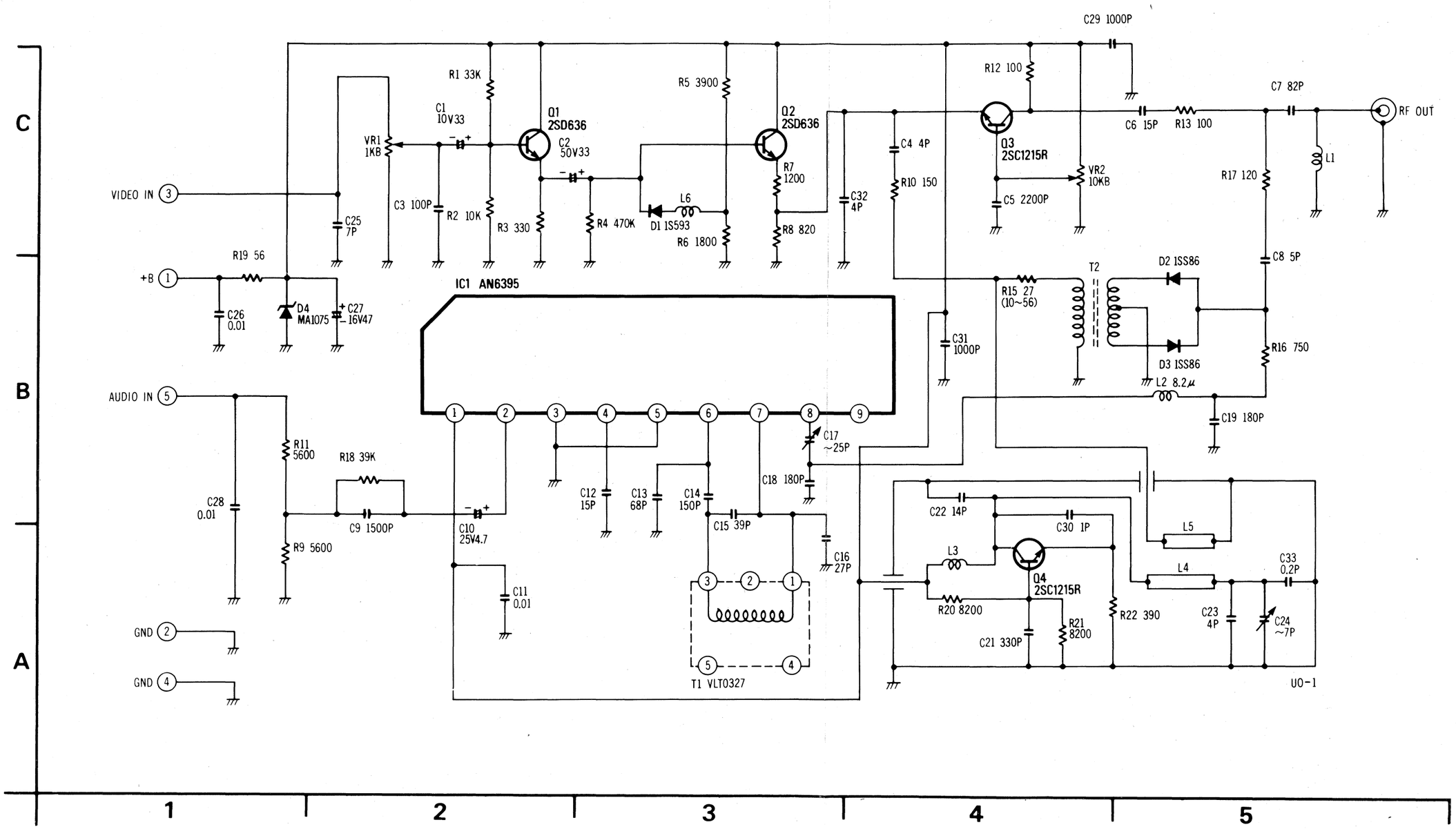

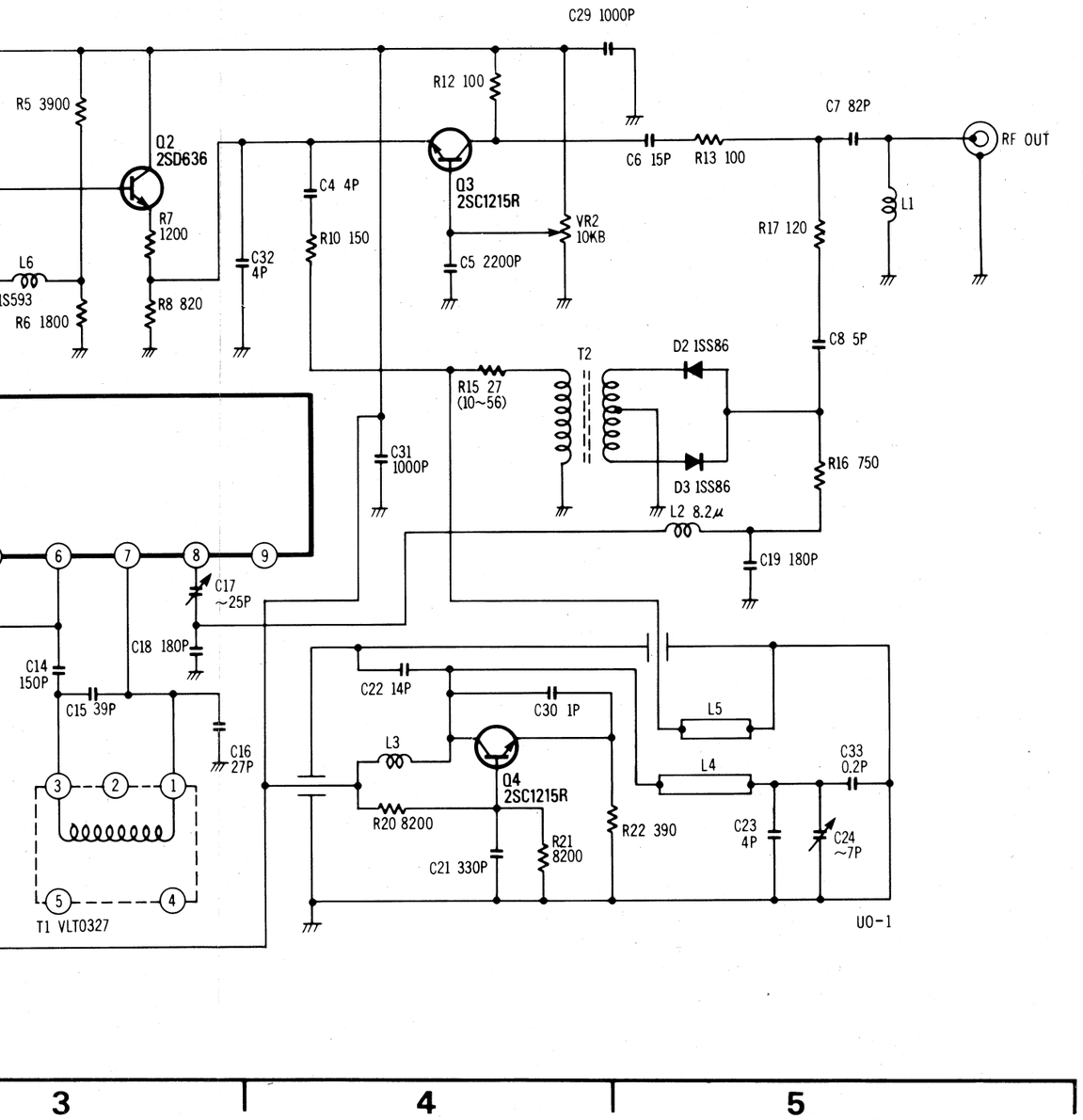

RF CONVERTER BOARD (ENC17552: NV-777B)

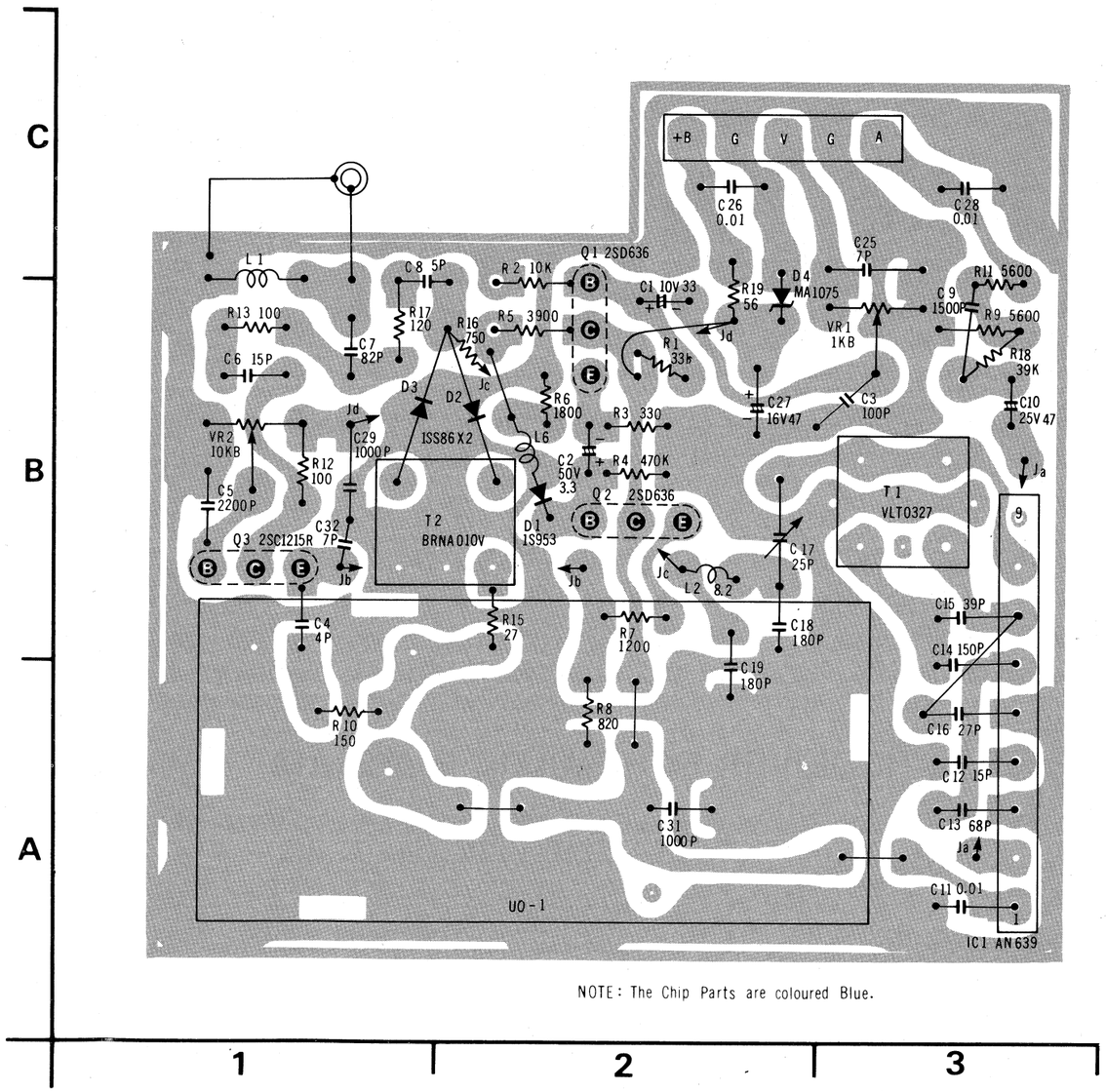

NOTE: The Chip Parts are coloured Blue.

IR WIRELESS RECEIVER BOARD (VEP06178A)

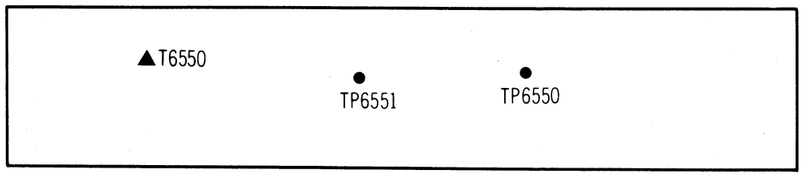

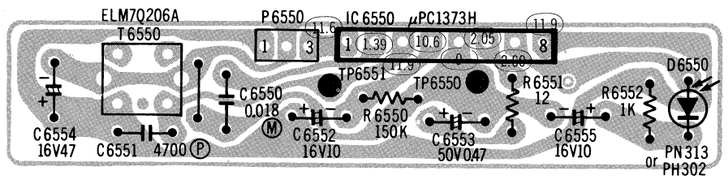

P6550

1	REG+12V
2	GND
3	OUT PUT

IR WIRELESS RECEIVER SCHEMATIC DIAGRAM

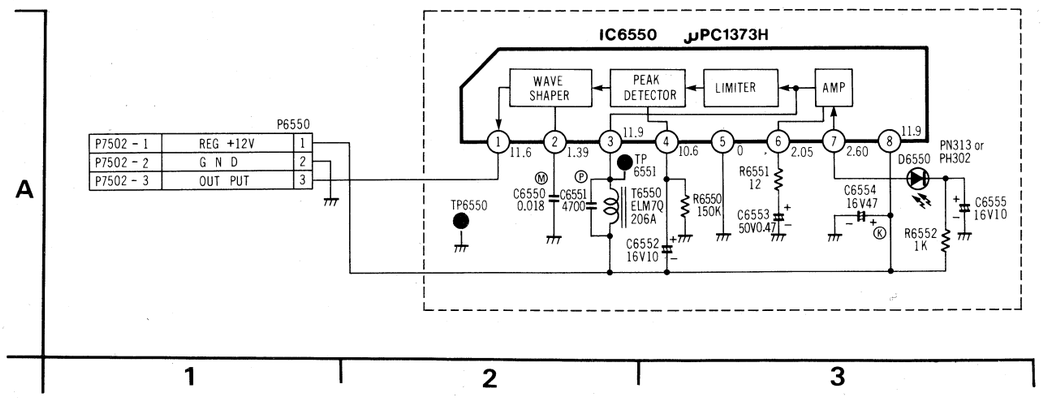

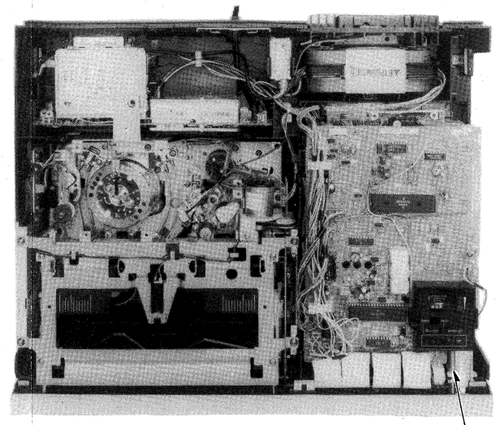

IR Wireless Receiver Board

IR WIRELESS TRANSMITTER BOARD

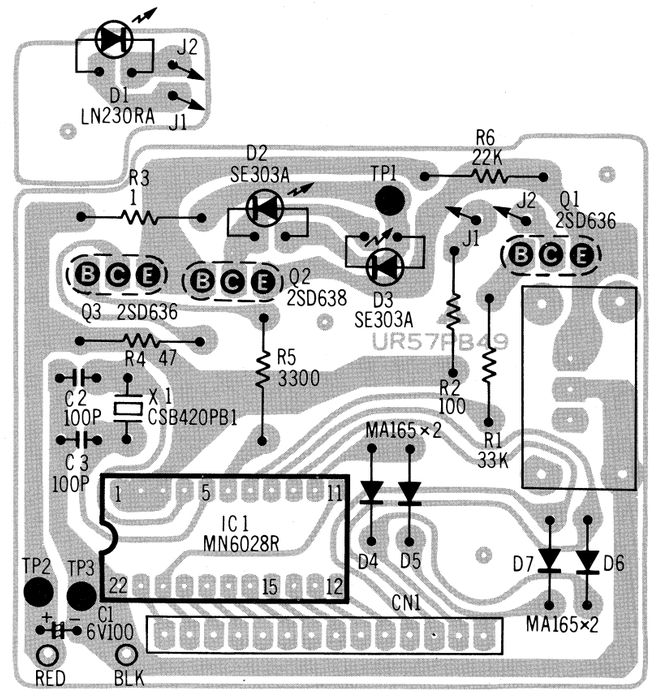

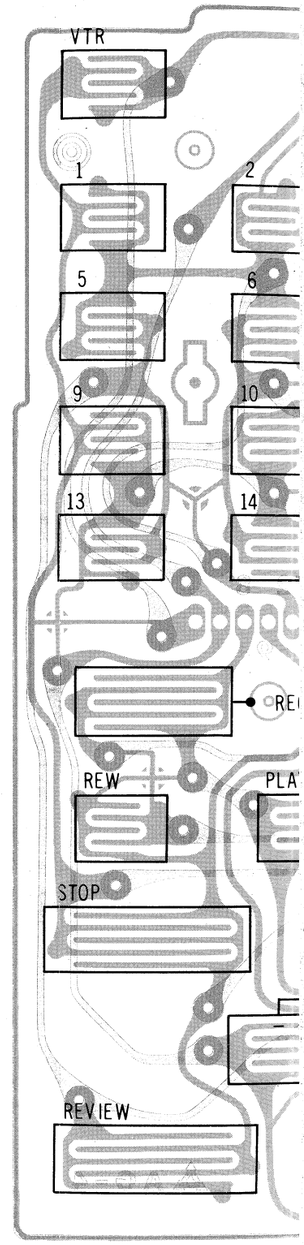

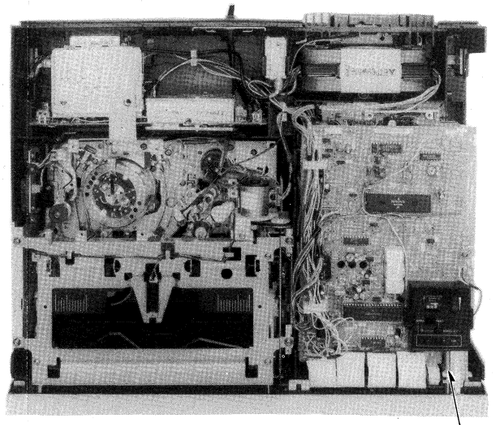

IR Wireless Receiver Board

IR WIRELESS TRANSMITTER BOARD

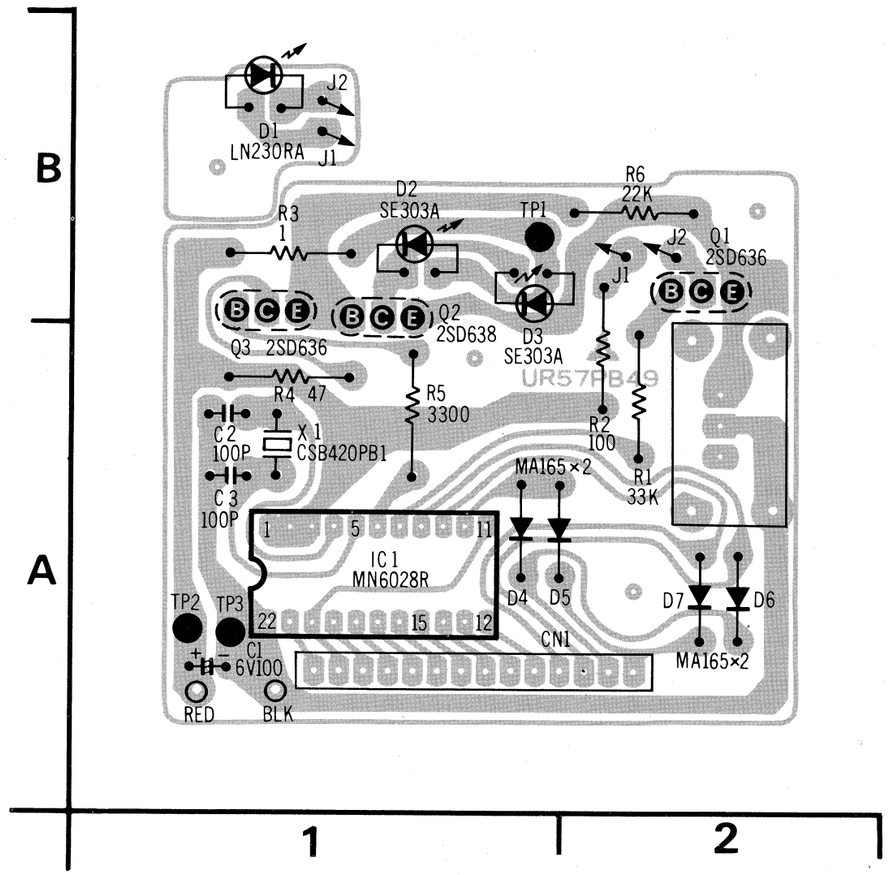

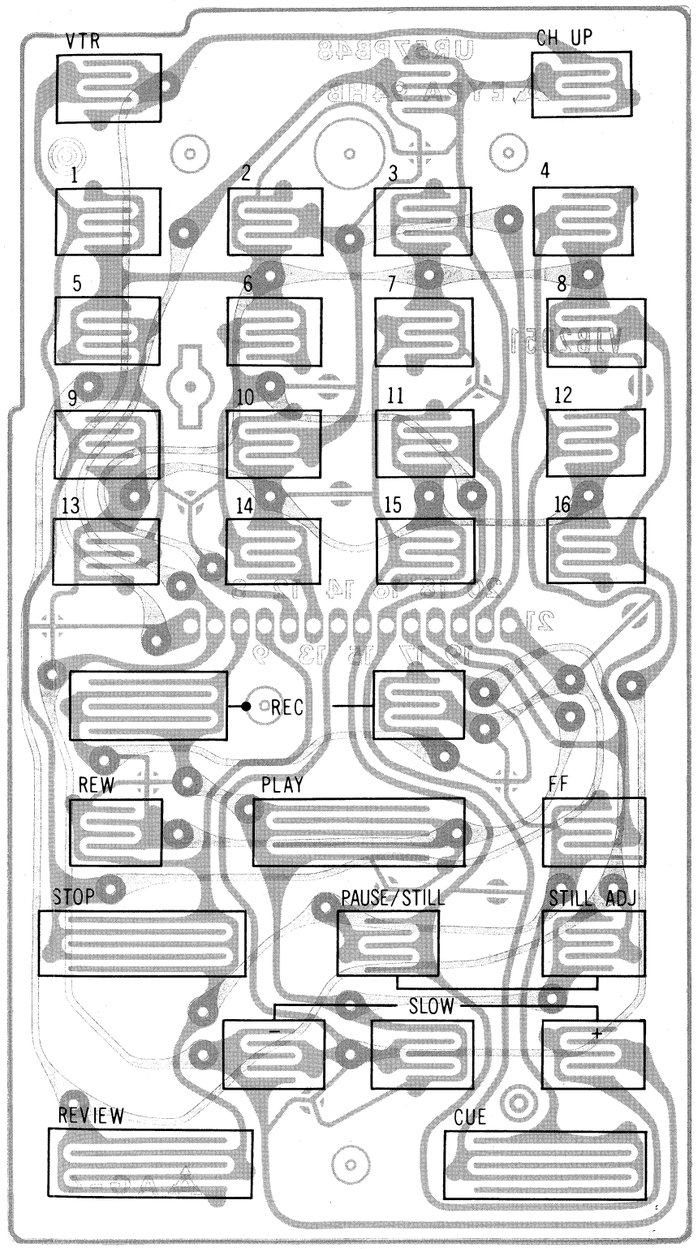

FUNCTION NO.	FUNCTION
0	STOP
2	REW
3	F.F
4	REV
5	CUE
6	PAUSE/STILL
8	REC
10	PLAY
12	
15	SLOW (×1/2)
16	CH1
17	CH2
18	CH3
19	CH4
20	CH5
21	CH6
22	CH7
23	CH8
24	CH9
25	CH10
26	CH11
27	CH12
28	CH13
29	CH14
30	CH15
31	CH16
32	VTR
34	CH UP
46	SLOW +
47	SLOW −

IR WIRELESS SCHEMATIC DIAGRAM

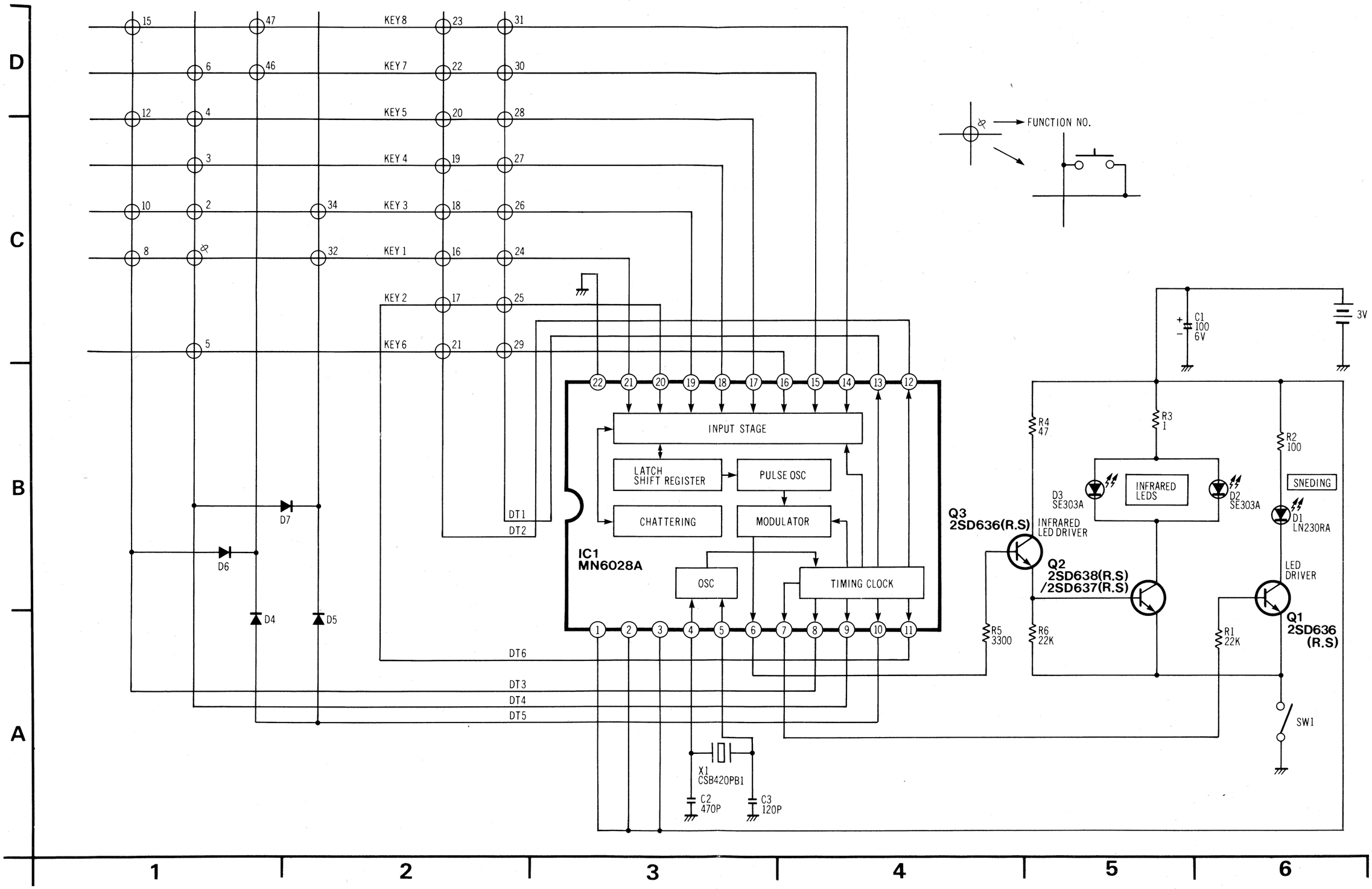

TOP VIE

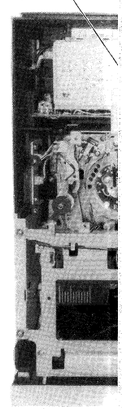

BOTTOM

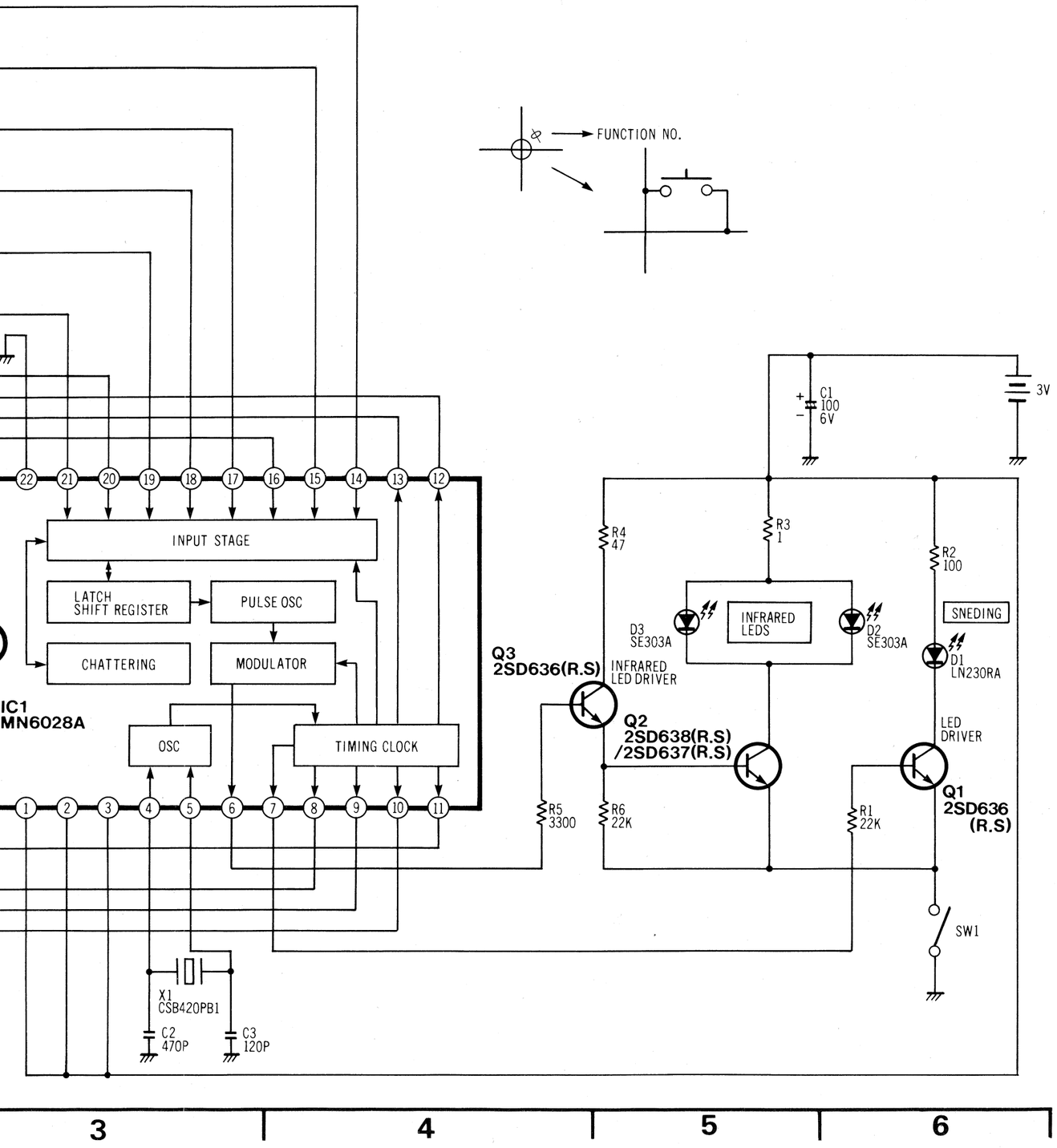

3 | 4 | 5 | 6

CIRCUIT BOARD LAYOUT

TOP VIEW

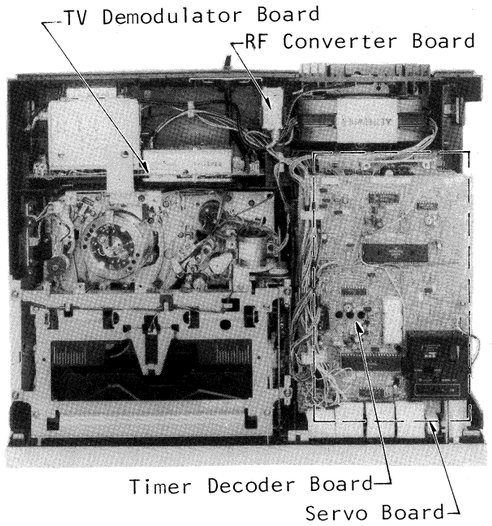

FRONT VIEW

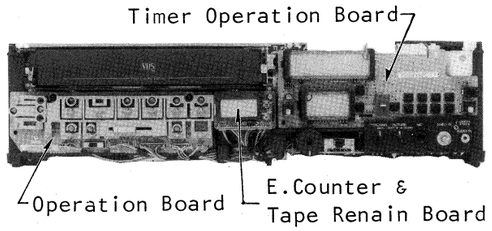

BOTTOM VIEW

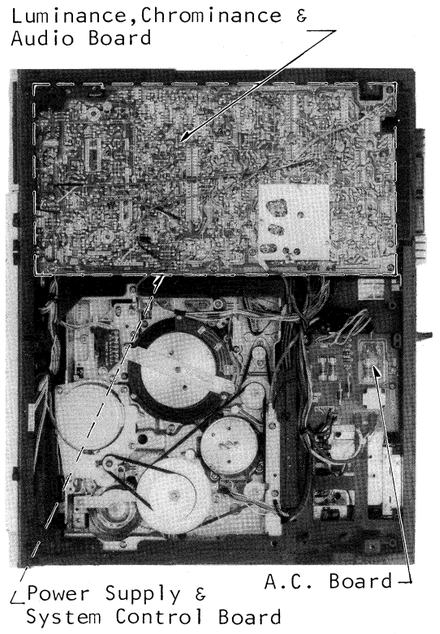

REAR VIEW

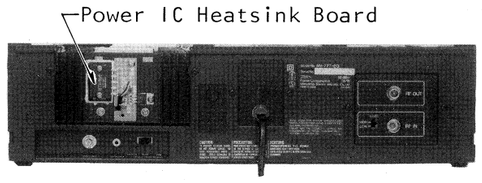

INTERCONNECTION SCHEMATIC DIAGRAM

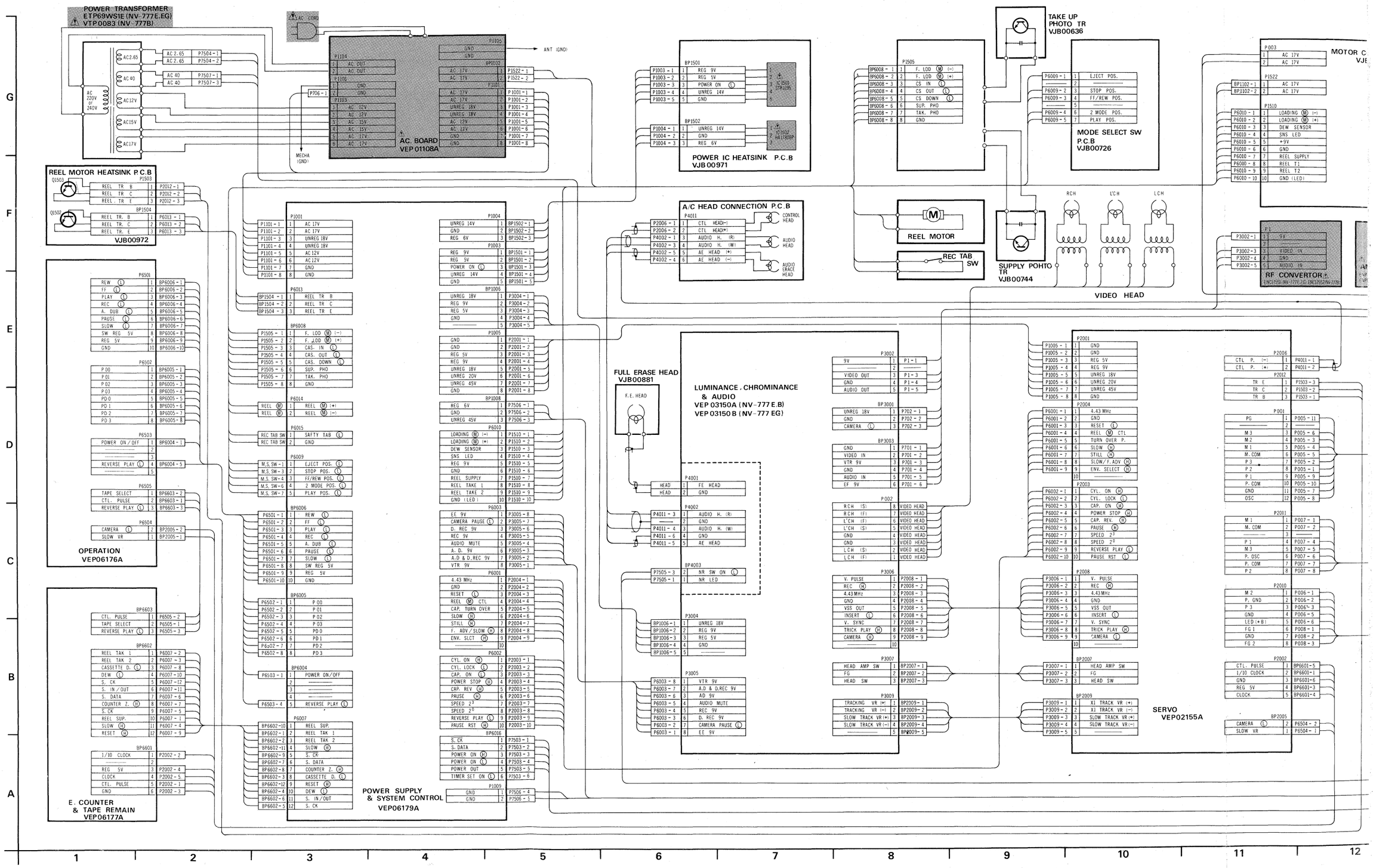

RAM

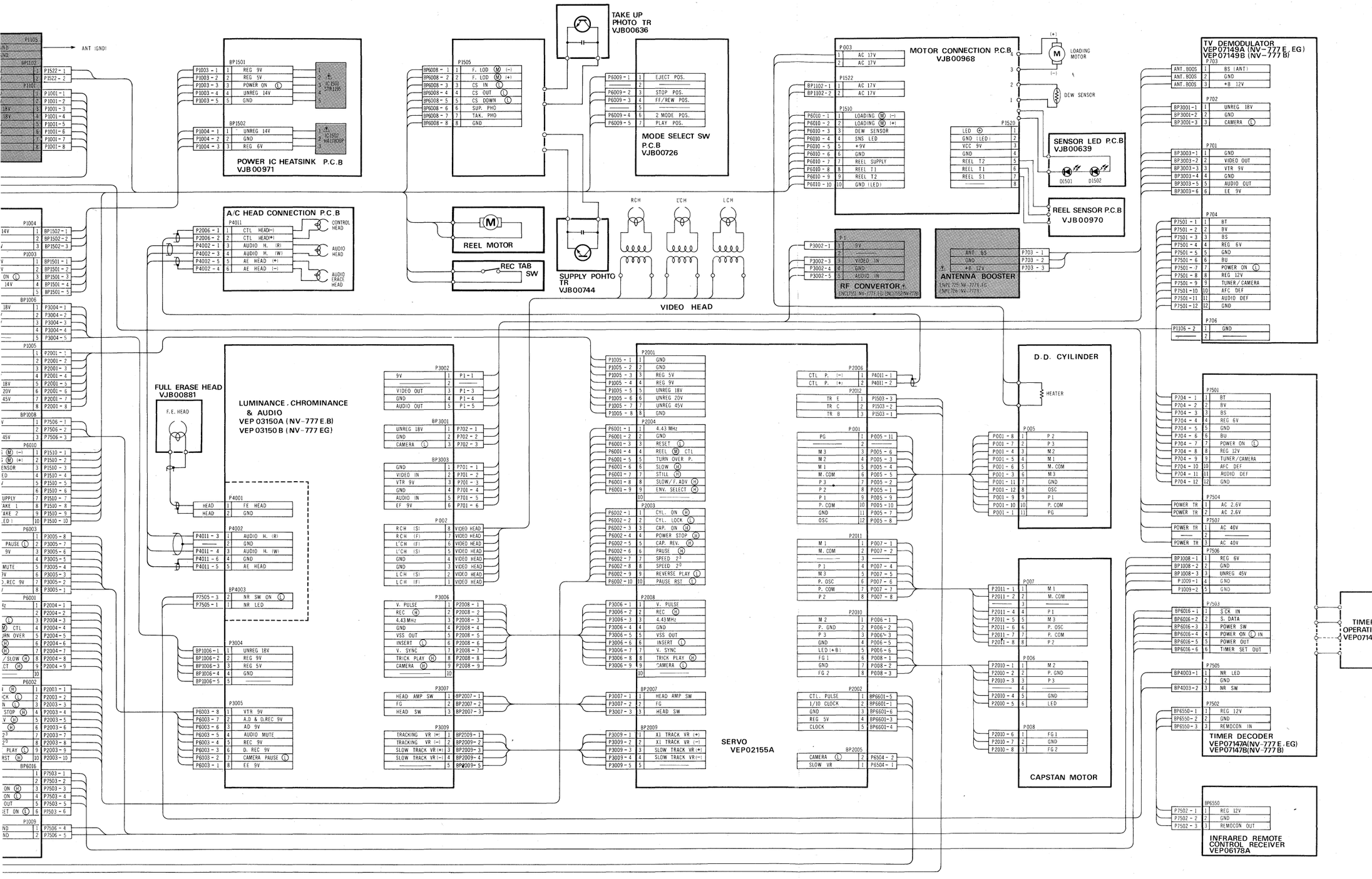
ANT (GND)
POWER IC HEATSINK P.C.B
VJB00971
IC1501 STR1195
IC1502 MA1780GP
TAKE UP PHOTO TR
VJB00636
MODE SELECT SW P.C.B
VJB00726
MOTOR CONNECTION P.C.B
VJB00968
LOADING MOTOR
DEW SENSOR
SENSOR LED P.C.B
VJB00639
REEL SENSOR P.C.B
VJB00970
TV DEMODULATOR
VEP07149A (NV-777 E, EG)
VEP07149B (NV-777 B)
A/C HEAD CONNECTION P.C.B
CONTROL HEAD
AUDIO HEAD
AUDIO ERASE HEAD
REEL MOTOR
REC TAB SW
SUPPLY POHTO TR
VJB00744
RCH
L'CH
LCH
VIDEO HEAD
RF CONVERTOR
ANTENNA BOOSTER
FULL ERASE HEAD
VJB00881
F.E. HEAD
LUMINANCE . CHROMINANCE & AUDIO
VEP 03150A (NV-777 E.B)
VEP 03150 B (NV-777 EG)
D.D. CYILINDER
HEATER
CAPSTAN MOTOR
SERVO
VEP02155A
TIMER OPERATION
VEP07148A
TIMER DECODER
VEP07147A(NV-777 E.EG)
VEP07147B(NV-777 B)
INFRARED REMOTE CONTROL RECEIVER
VEP06178A
5
6
7
8
9
10
11
12
13
14
15

ORDER NO. VRD-8207-110

Service Manual

Video Cassette Recorder

Vol. 4

Panasonic VHS

NV-777 -E -EG -B

Exploded Views
Replacement Parts List

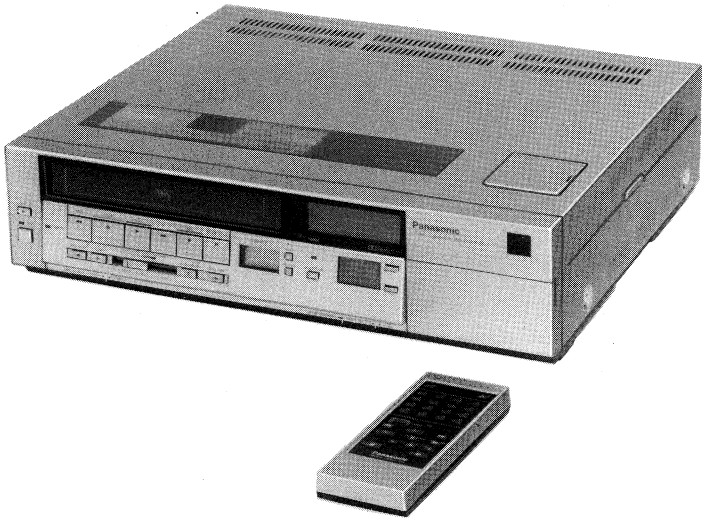

SPECIFICATIONS

Power Source:	220V AC 50/60Hz (NV-777-E, EG) 240V AC 50/60Hz (NV-777B)
Power Consumption:	Approx. 38 watts
Television System:	CCIR: 625 lines, 50 fields PAL colour signal (NV-777-E/-B) CCIR: 625 lines, 50 fields PAL/SECAM (DDR) colour signal (NV-777-EG)
Video Recording System:	2 rotary heads, helical scanning system Luminance: FM azimuth recording Colour signal: converted subscarrier phase shift recording
Audio Track:	1 track
Tape Format:	Tape width 12.7mm high density tape
Tape Speed:	23.39mm/s
Record/Playback Time:	240 min. with NV-E240
FF/REW Time:	Less than 4.5 min. with NV-E180
Heads:	Video: 3 rotary heads 1 pair for normal recording and playback (R-L Head) 1 pair for trick play (L-L′ Head) (field still and slow) Audio/Control: 1 stationary head Erase: 1 full track erase
Input Level:	Video: VIDEO IN connector (BNC) 1.0Vp-p, 75Ω terminated Audio: LINE IN jack More than −20dB, 50kΩ
Output Level:	Video: VIDEO OUT connector (BNC) 1.0Vp-p, 75Ω terminated Audio: LINE OUT jack −6dB, less than 1kΩ RF Modulated: UHF channel 36 ± 4CH 73dBμ ± 4dBμ 75Ω terminated
Weight:	10.4kg
Dimensions:	430(W) × 115(H) × 372(D)mm
Accessory Supplied:	1 pc. DIN-RF Cable VJA0130 1 pc. Video Cassette Tape (NV-777-E/-B) 1 pc. Wireless Remote Controller, NV-A17-E
Optional Accessories:	Video cassette tape: NV-E240 Approx. 344m, 240 min. NV-E180 Approx. 258m, 180 min. NV-E120 Approx. 174m, 120 min. NV-E60 Approx. 88m, 60 min. Video Camera, WV-2600E, WV-3000E, WV-3200E

Weight and dimensions shown are apparoximate.
Specifications are subject to change without notice.

Panasonic

Matsushita Electric Trading Co., Ltd.
P.O. Box 288, Central Osaka Japan

CONTENTS

SPECIFICATIONS ..... Cover
INNER PARTS LOCATION 4- 1
1. TOP VIEW 4- 1
2. BOTTOM VIEW 4- 2
EXPLODED VIEWS 4- 3
1. Transport Section 4- 3
2. Moving Mechanism Section 4- 4
3. Chassis Parts Section 4- 5
4. Chassis Frame Section -(1)..... 4- 6
5. Chassis Frame Section -(2)..... 4- 7
6. Casing Parts Section 4- 8
7. Packing Parts Section 4- 9
8. Remote Control Transmitter Section 4-10
MECHANICAL REPLACEMENT PARTS LIST 4-11
ELECTRICAL REPLACEMENT PARTS LIST 4-14

INNER PARTS LOCATION

Top View

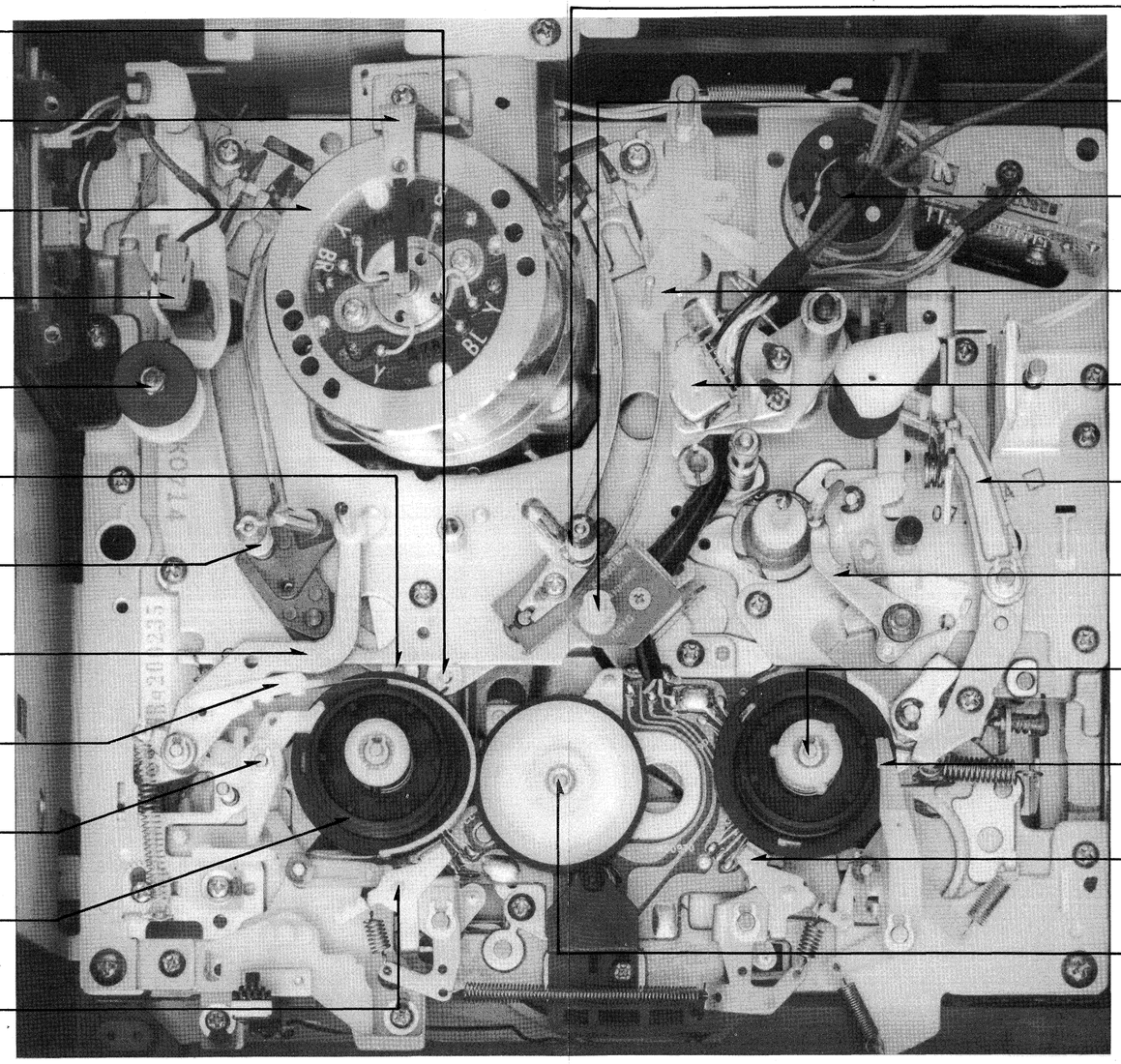

Bottom View

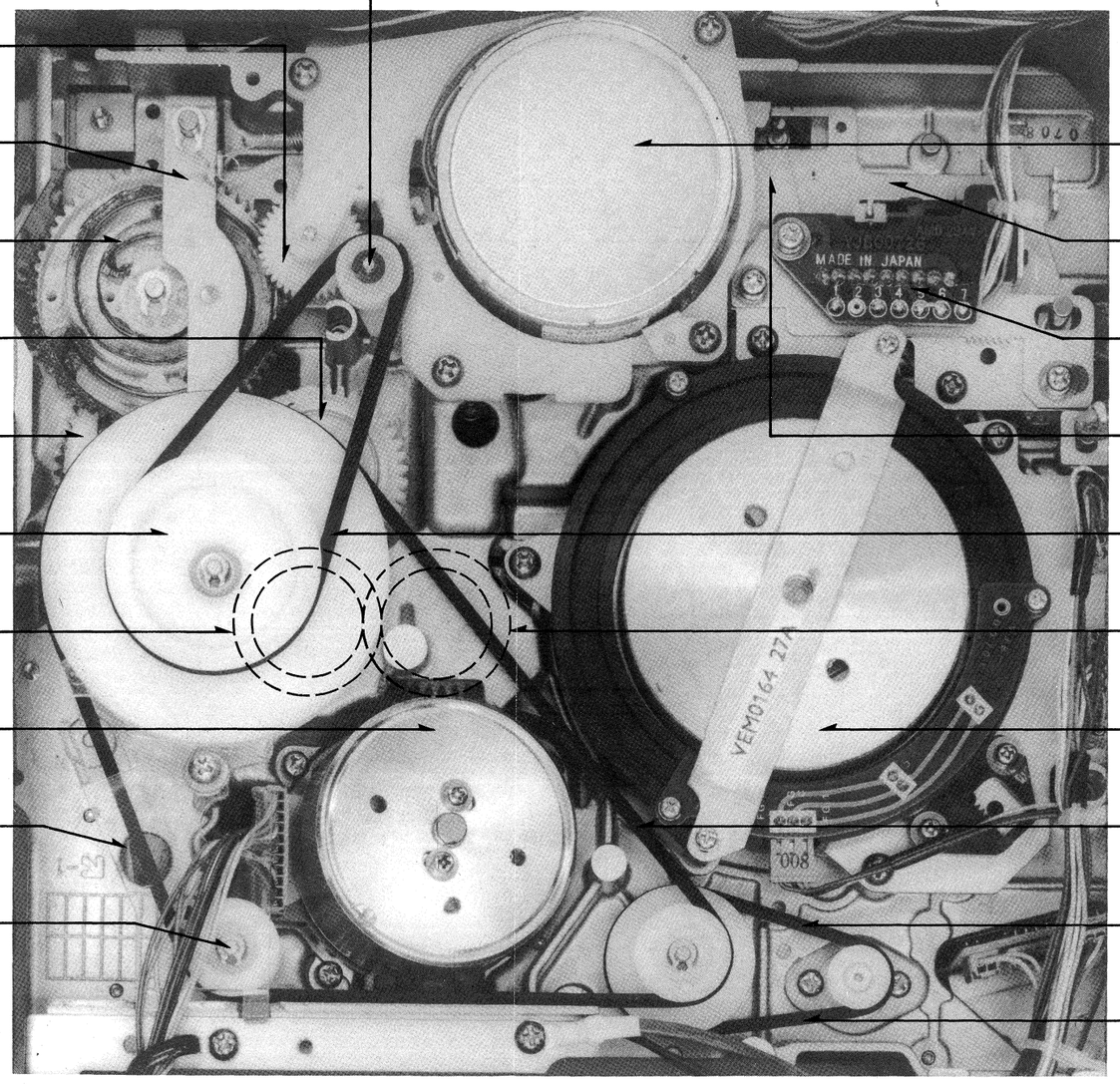
Clutch Pulley (VDP0850)
Kick Gear (VDG0080)
Sector Gear Unit (VXL0988)
Cam Gear (VDG0069)
Driving Gear (VDG0016)
Intermediate Gear (VDG0017)
Large Pulley (VDP0849)
Loading Gear Unit (VXP0325)
D.D. Cylinder Unit (VEG0230)
Belt Cover (VGF0021)
Idler Pulley (VDP0750)
Reel Motor (KFN-56FB8A)
Main Lever [1] Unit (VXL1039)
Mode Select Switch (VSS0060)
Sub Lever Unit (VXL1032)
Kick Pulley Belt (VDV0138)
Loading Gear Unit (VXP0325)
D.D. Capstan (VEM0165)
Loading Belt [2] (VDV0135)
Loading Pulley (VDP0849)
Loading Belt [1] (VDV0122)
MADE IN JAPAN
VEM0164 27A

EXPLODED VIEWS ❶ *Transport Section*

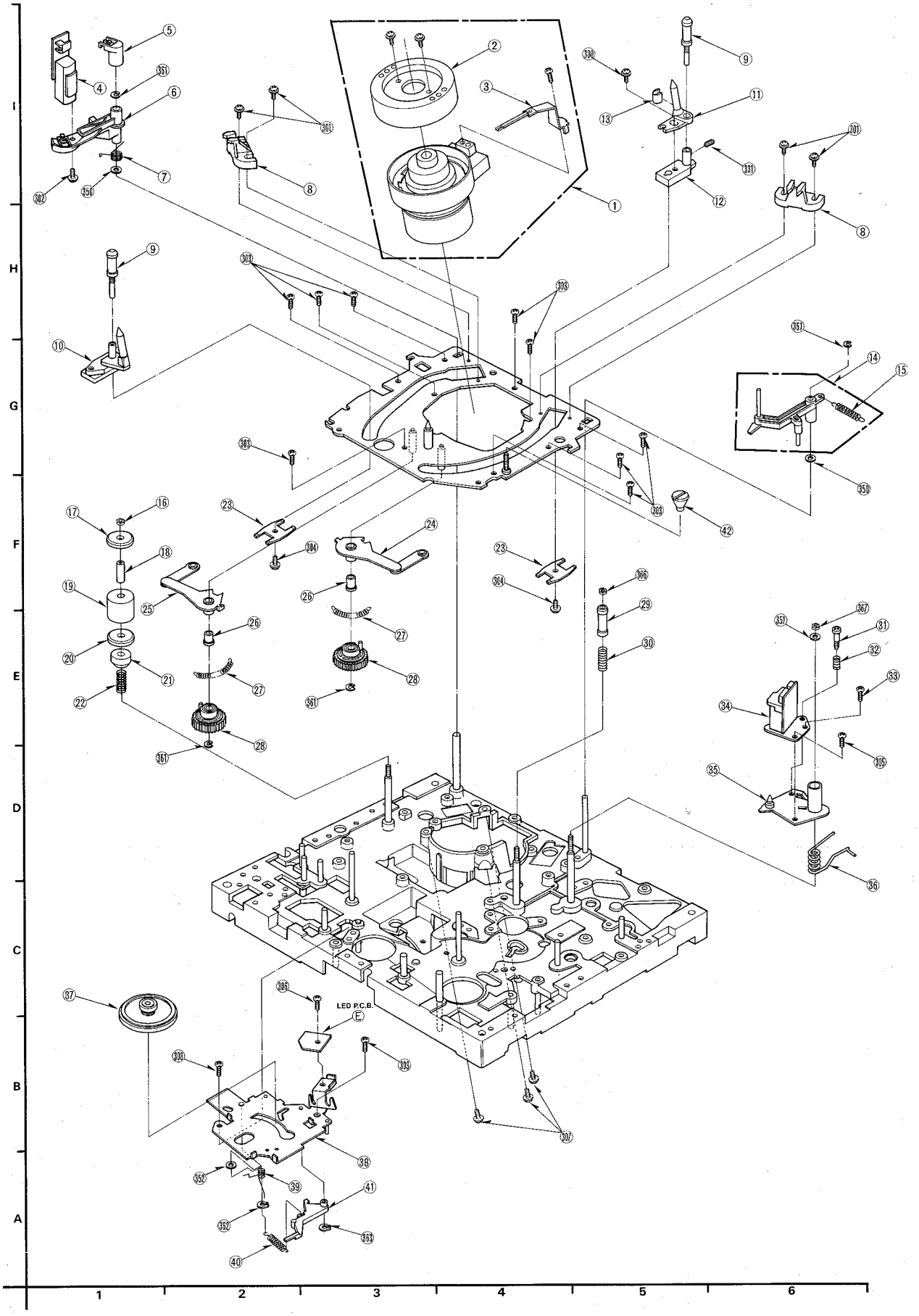

❷ *Moving Mechanism Section*

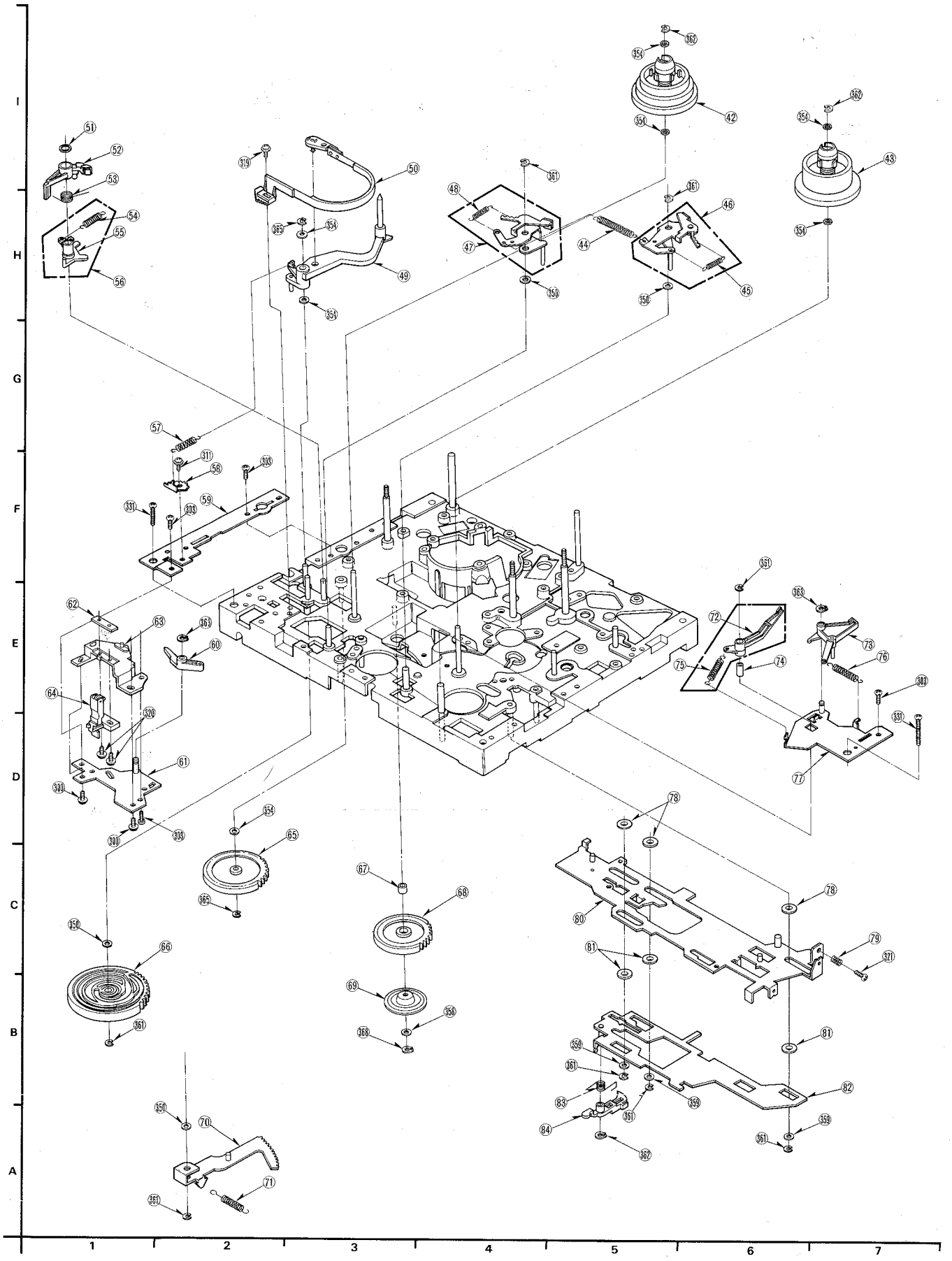

❸ *Chassis Parts Section*

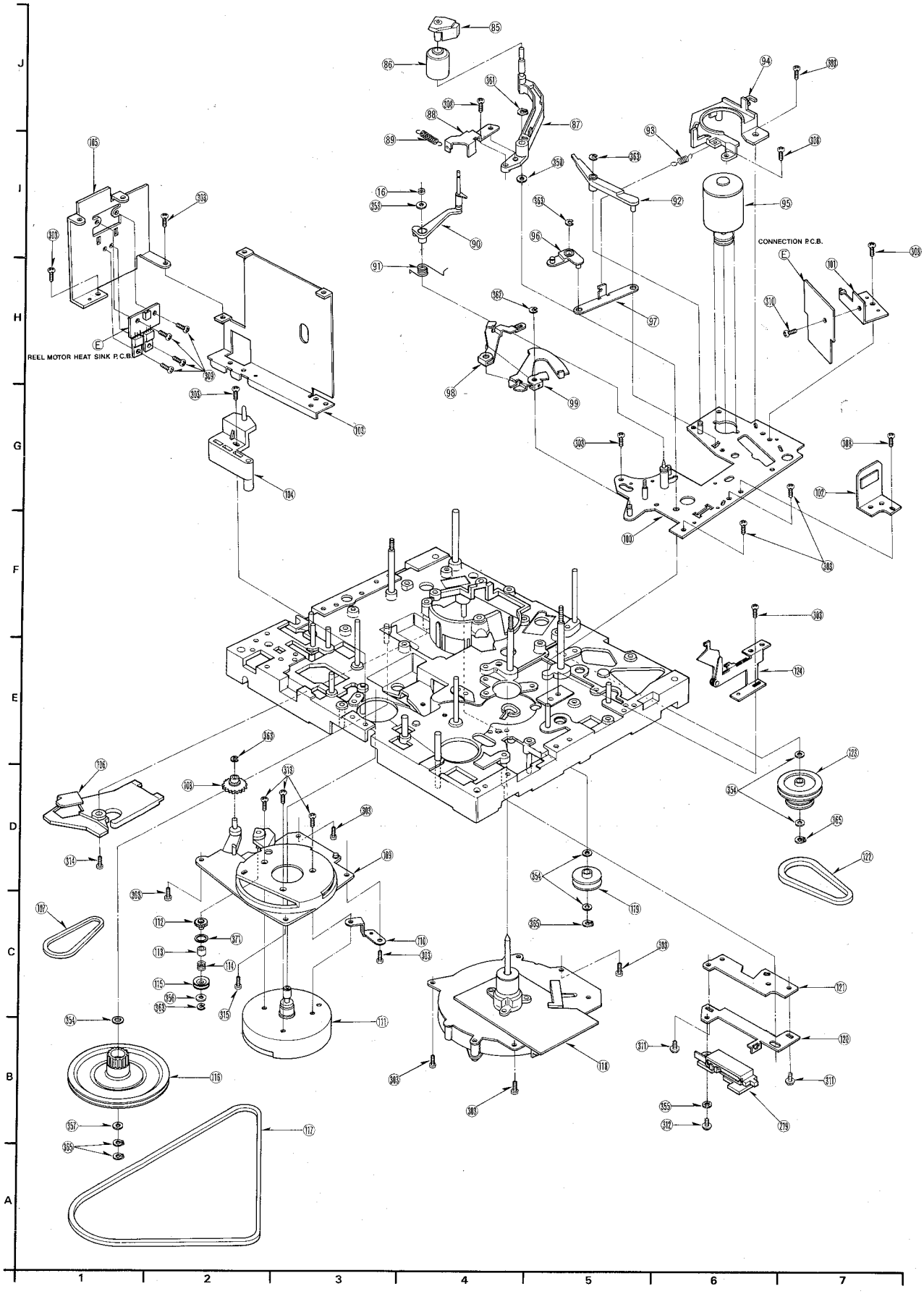

❹ *Chassis Frame Section -(1)*

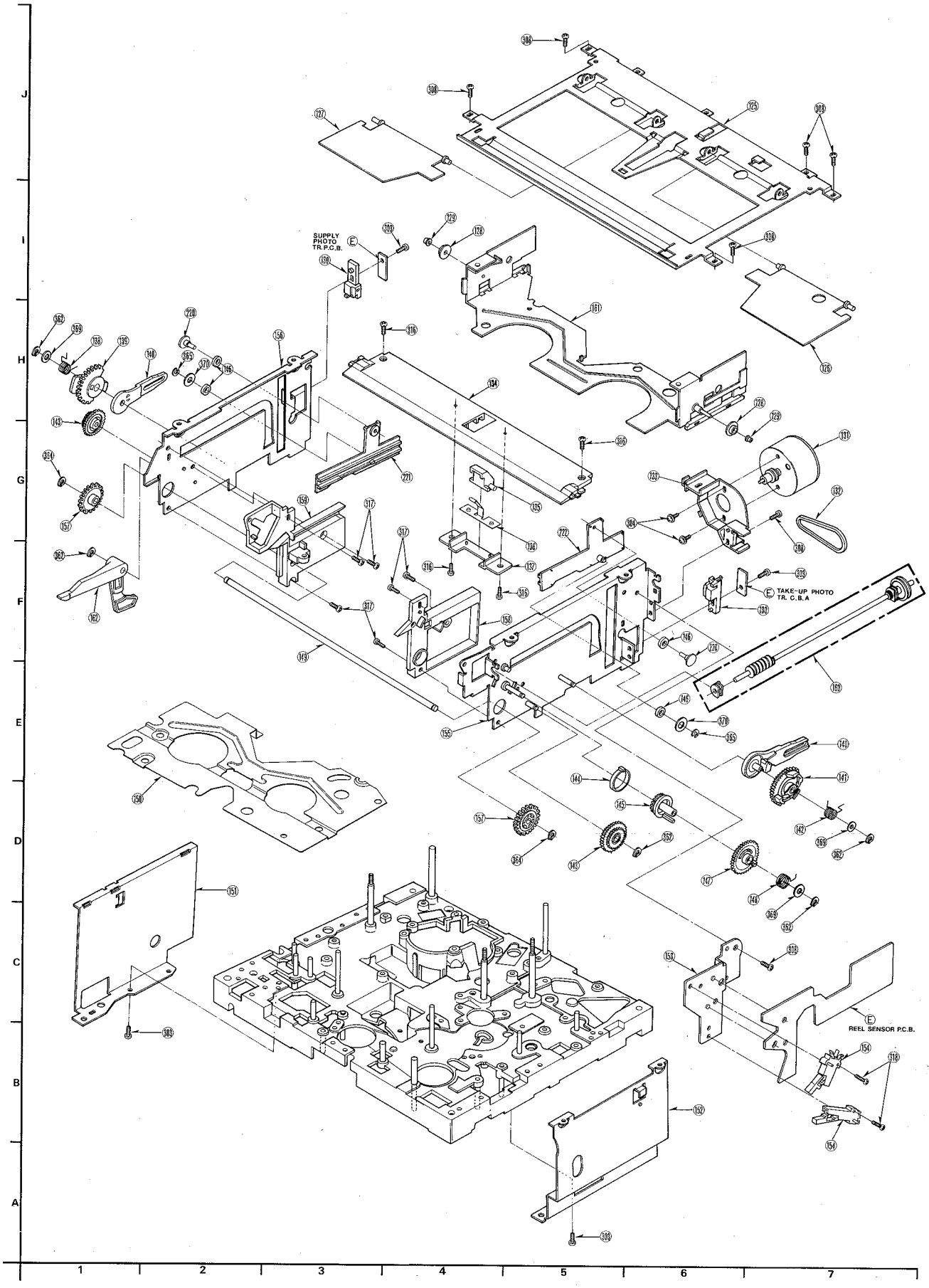

5 Chassis Frame Section -(2)

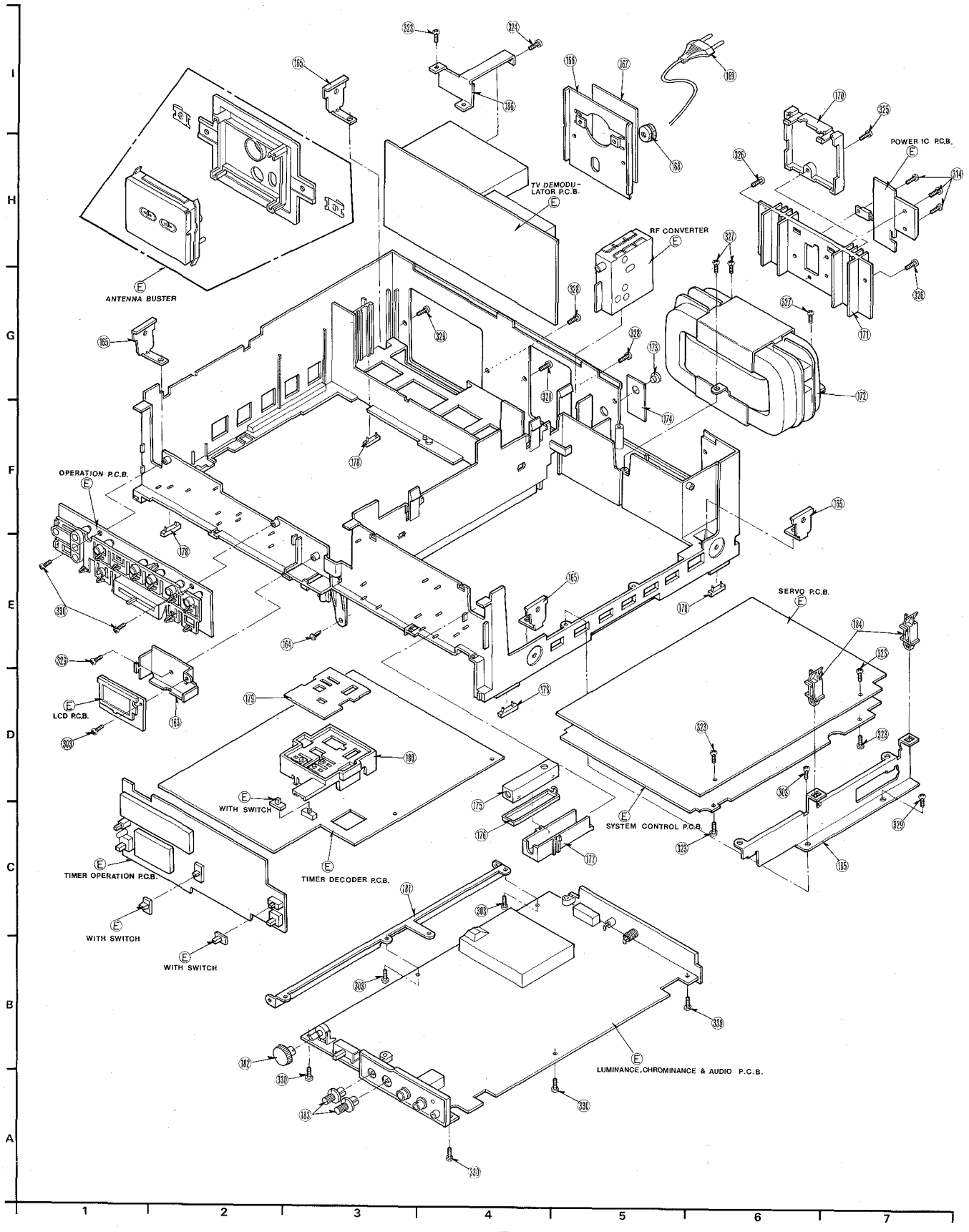

6 *Casing Parts Section*

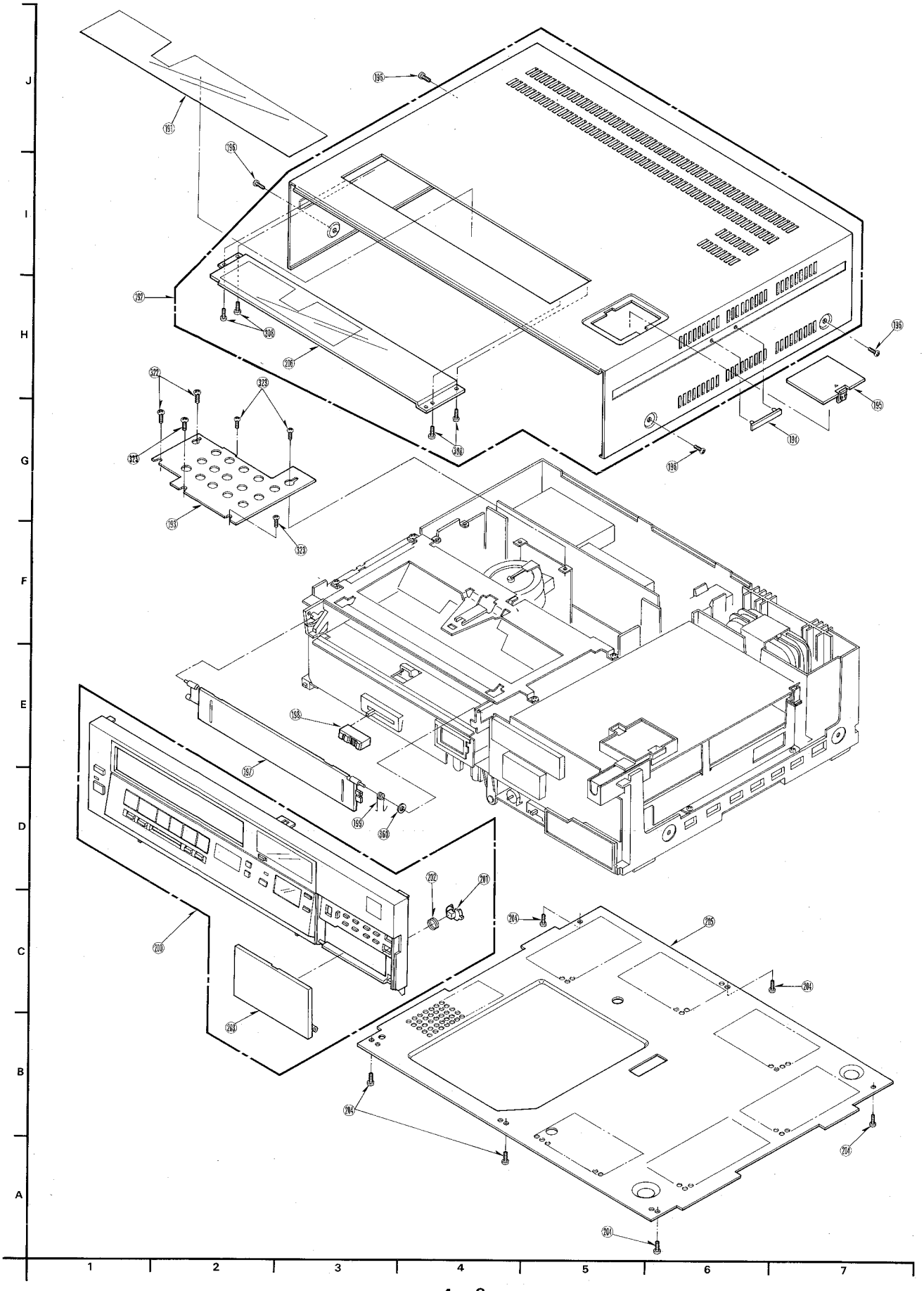

❼ *Packing Parts Section*

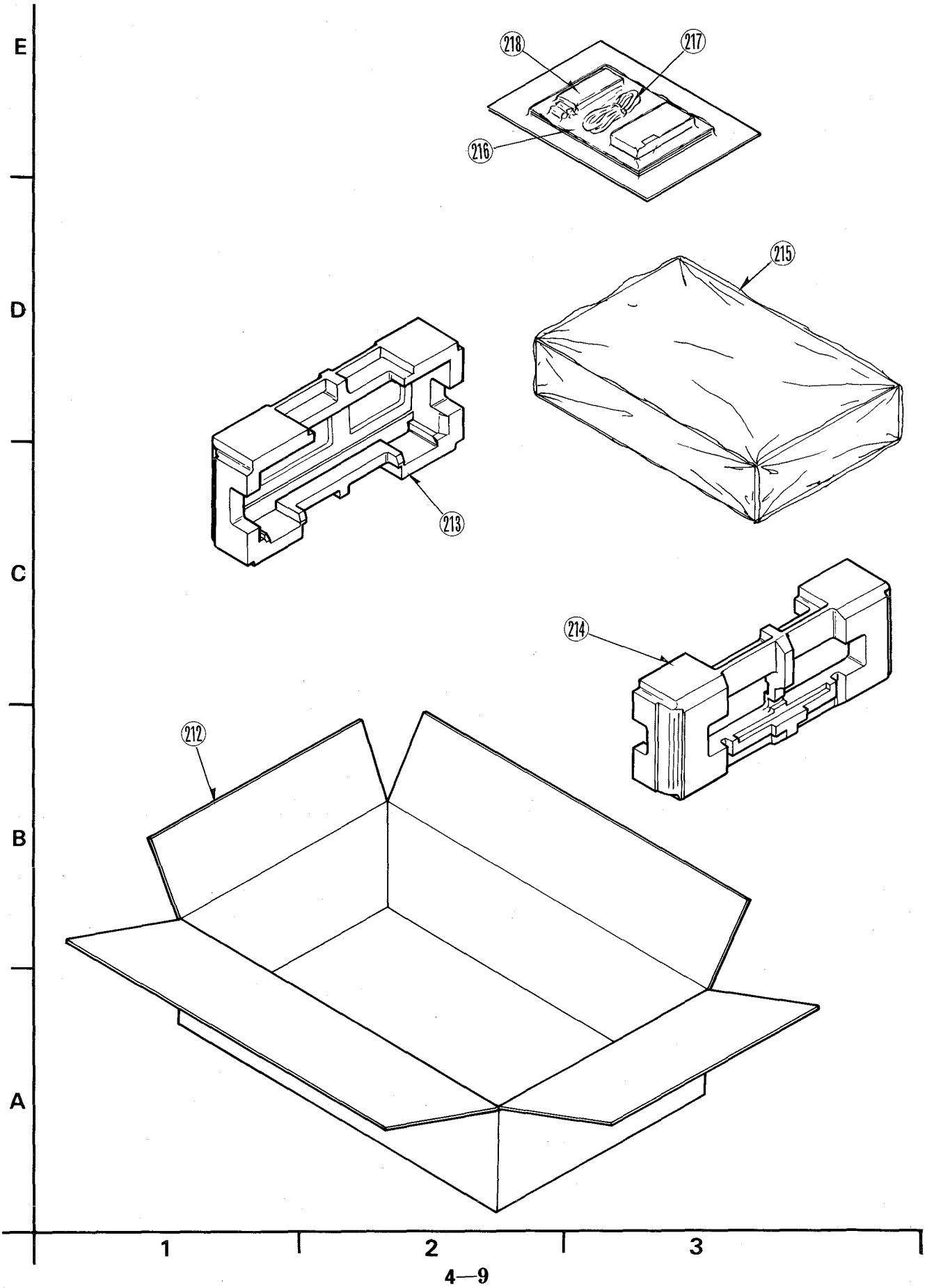

8 *Remote Control Trausmitter section*

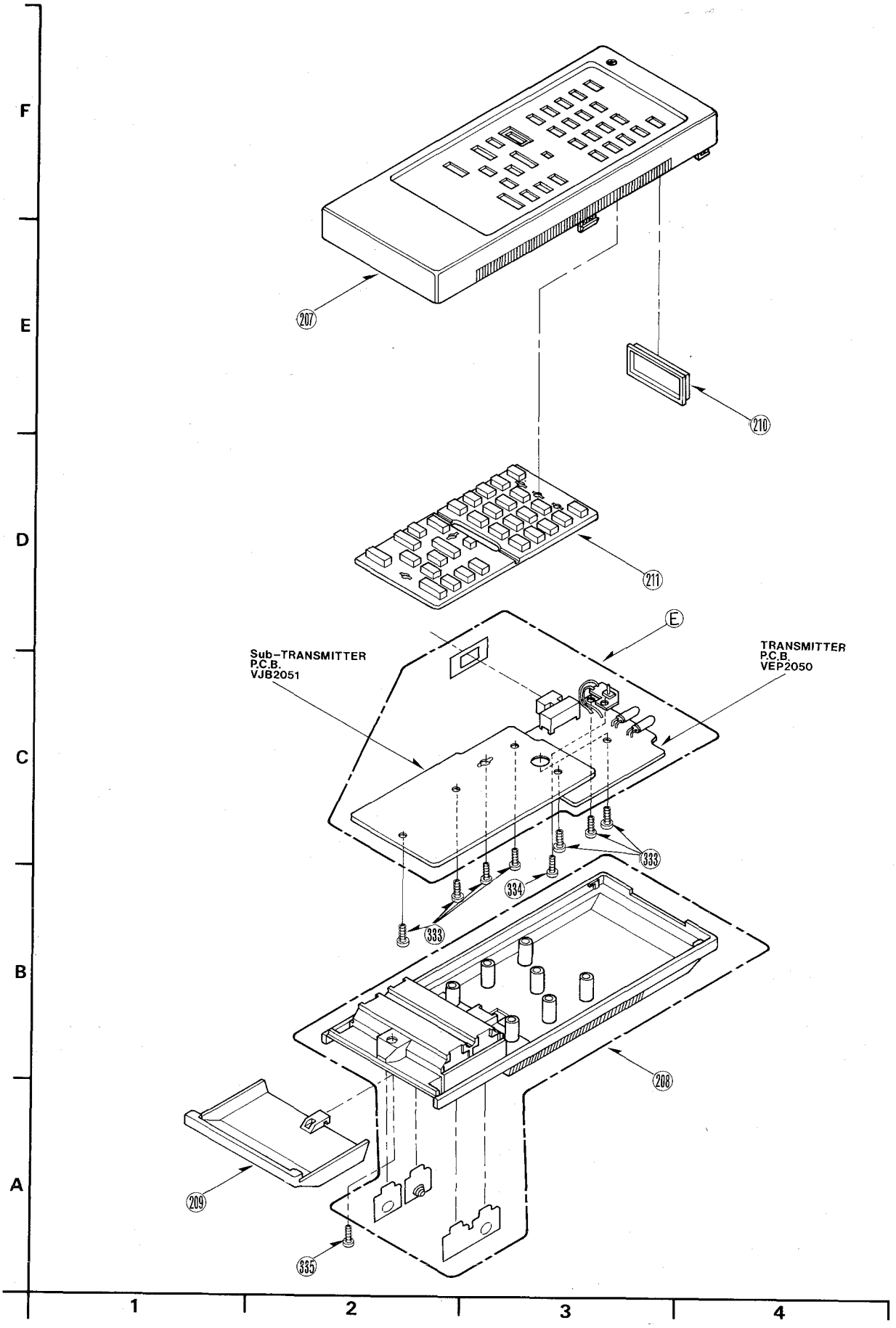

MECHANICAL REPLACEMENT PARTS LIST

Model No. NV-777E/EG/B

Notes:
1. * Be sure to make your orders of replacement parts according to this list.
2. IMPORTANT SAFETY NOTICE
   Components identified by ⚠ have special characteristics important for safety. When replacing any of these components, use only the original ones.

Ref. No.		Part No.	Part Name & Description	Pcs / Set	Remarks
1 (1)		VEG0230	DD Cylinder Unit	1	⚠
2 (1)		VEH0177	Upper Cylinder Unit	1	
3 (1)		VXA1584	Discharge Angle	1	
4 (1)		VBS0023	Erase Head	1	
5 (1)		VMD0369	Wire Holder	1	
6 (1)		VML1370	Erase Head Lever	1	
7 (1)		VMB1005	Erase Head Lever Spring	1	
8 (1)		VMD0100	Post Stopper	2	
9 (1)		VXP0431	Roller Post Unit	2	
10 (1)		VXA1565	Inclind Base (S) Unit	1	
11 (1)		VXA1084	Inclind Base (B) Unit	1	
12 (1)		VXA1755	Shaft Holder (T) Unit	1	
13 (1)		VMX0301	Guide Snap	1	
14 (1)		VXL1035	P6 Post Unit	1	
15 (1)		VMB1081	P6 Spring	1	
16 (1)		VHD0045	Nut	1	
17 (1)		VMX0297	Limiter Roller (Upper)	1	
18 (1)		VMX0288	Collar	1	
19 (1)		VDP0759	Supply Roller	1	
20 (1)		VMX0456	Limiter (S)	1	
21 (1)		VMX0457	Limiter Roller (Lower)	1	
22 (1)		VMB0754	Supply Limiter Spring	1	
23 (1)		VMA4436	Shaft Holder Spring (A)	2	
24 (1)		VXL0754	Loading Arm (R) Unit	1	
25 (1)		VXL0753	Loading Arm (L) Unit	1	
26 (1)		VMX0257	Arm Sleeve	2	
27 (1)		VMB0669	Loading Spring	2	
28 (1)		VXP0325	Loading Gear Unit	2	
29 (1)		VMX0280	Post Sleeve	1	
30 (1)		VMB0699	P4 Spring	1	
31 (1)		VHD0054	Adjust Screw	1	
32 (1)		VMB0404	Adjust Spring	1	
33 (1)		VHD0089	Adjust Screw	1	
34 (1)		VBR0061	A/C Head	1	
35 (1)		VXA1571	Head Base (B) Unit	1	
36 (1)		VMB0997	A/C Head Spring	1	
37 (1)		VXP0463	Idler Unit	1	
38 (1)		VXA1710	Hall IC Base 1 Unit	1	
39 (1)		VMB1083	Idler Spring	1	
40 (1)		VMB0882	Idler Stopper Spring	1	
41 (1)		VML1433	Idler Stopper Lever	1	
42 (2)		VXR0109	Supply Reel Table Unit	1	
43 (2)		VXR0111	Takeup Reel Table Unit	1	
44 (2)		VMB0661	Brake Arm Spring	1	
45 (2)		VMB0660	Brake Lever Spring	1	
46 (2)		VXL1040	Brake Arm (R) Unit	1	
47 (2)		VXL1041	Brake Arm (L) Unit	1	
48 (2)		VMB0660	Brake Lever Spring	1	
49 (2)		VXL0974	Tension Arm Unit	1	
50 (2)		VXZ0129	Tension Band Unit	1	
51 (2)		VMX0249	Soft Brake Stopper	1	
52 (2)		VXZ0110	Soft Brake Arm Unit	1	
53 (2)		VMB0701	Soft Brake Coil Spring	1	
54 (2)		VMB1024	Soft Brake Spring (II)	1	
55 (2)		VML1372	Soft Brake Lever A (II)	1	
56 (2)		VXZ0134	Soft Brake Lever A (II) 1 Unit	1	
57 (2)		VMB1004	Tension Spring	1	
58 (2)		VMA5813	Adjust Hook	1	
59 (2)		VMA6052	Position Plate	1	
60 (2)		VXL0875	S Brake Release Unit	1	
61 (2)		VXA1574	Brake Release Base Unit	1	
62 (2)		VMA5372	Nut Plate	1	
63 (2)		VMA5826	Cassette Support Angle	1	
64 (2)		VSM0043	Safety Tab Switch	1	
65 (2)		VDG0017	Intermediate Gear	1	
66 (2)		VDG0069	Cam Gear	1	
67 (2)		VMX0268	Gear Sleeve	1	
68 (2)		VDG0016	Driving Gear	1	
69 (2)		VMA4088	Holder Plate	1	
70 (2)		VXL0988	Sector Gear Unit	1	
71 (2)		VMB1002	Sub Rod Spring	1	
72 (2)		VXZ0112	Soft Brake Unit	1	
73 (2)		VXL0873	Soft Brake (T) Unit	1	
74 (2)		VMX0367	Brake Sleeve	1	
75 (2)		VMB0885	Soft Brake Spring	1	
76 (2)		VMB0886	Soft Brake Spring (T)	1	
77 (2)		VXA1706	Chassis Angle (R) 1 Unit	1	
78 (2)		VMX0122	Slide Washer	3	
79 (2)		VMB0680	Adjust Spring	1	
80 (2)		VXL1039	Main Lever 1 Unit	1	
81 (2)		VMX0471	Slide Washer	3	
82 (2)		VXL1032	Sub Lever Unit	1	
83 (2)		VMB0890	Kick Lever Spring	1	
84 (2)		VML1432	Kick Lever	1	
85 (3)		VMX0365	Pressure Roller Cap	1	
86 (3)		VXG0015	Pressure Roller Unit	1	
87 (3)		VXL1046	Pressure Roller Lever Unit	1	
88 (3)		VMA6069	Spring Hook Plate	1	
89 (3)		VMB0880	Pressure Spring	1	
90 (3)		VXL1047	P5 Arm Unit	1	
91 (3)		VMB0891	P5 Arm Spring	1	
92 (3)		VML1431	P6 Release Lever	1	
93 (3)		VMB1082	Rod Spring	1	
94 (3)		VMD0440	Cover Panel	1	
95 (3)		VEM0135	Loading Motor Unit	1	⚠
96 (3)		VML1430	P6 Lever	1	
97 (3)		VMM0109	P6 Rod	1	
98 (3)		VML1429	Sub Action Lever	1	
99 (3)		VML1270	Action Lever	1	
100 (3)		VXA1709	P5 Post Base 1 Unit	1	
101 (3)		VMA6059	PC Board Angle	1	
102 (3)		VEK1293	Dew Sensor Unit	1	
103 (3)		VMA6053	Chassis Bracket	1	
104 (3)		VMD0442	Brake Release Bracket	1	
105 (3)		VSC0844	Head Sink	1	
106 (3)		VGP0021	Belt Cover	1	
107 (3)		VDV0138	Kick Pulley Belt	1	
108 (3)		VDG0080	Kick Gear	1	
109 (3)		VXA1708	Reel Motor Bracket 1 Unit	1	
110 (3)		VMA6055	Earth Angle	1	
111 (3)		KFN-56FB8A	Reel Motor	1	⚠
112 (3)		VDG0081	Clutch Gear	1	
113 (3)		VMX0405	Clutch Collar	1	
114 (3)		VMB0897	Clutch Spring	1	
115 (3)		VDP0850	Clutch Pulley	1	
116 (3)		VDP0849	Large Pulley	1	
117 (3)		VDV0135	Loading Belt (2)	1	
118 (3)		VEM0165	DD Capstan	1	⚠
119 (3)		VDP0750	Idler Pulley	1	
120 (3)		VMA6056	Switch Holder Angle (A)	1	
121 (3)		VMA6057	Switch Holder Angle (B)	1	
122 (3)		VDV0122	Loading Belt (1)	1	
123 (3)		VDP0735	Loading Pulley	1	
124 (3)		VXA1726	Opener Unit	1	
125 (4)		VMA6074	Top Plate	1	
126 (4)		VMD0458	Plate (R)	1	
127 (4)		VMD0457	Plate (L)	1	

Ref. No.		Part No.	Part Name & Description	Pcs / Set	Remarks
128 (4)		VDP0902	Cassette Holder Roller	2	
129 (4)		VDP0903	Wiper Arm Roller	2	
130 (4)		VMD0091	Photo Tr Bracket (L) (R)	2	
131 (4)		VRD0011	Motor	1	⚠
132 (4)		VDV0074	Loading Belt	1	
133 (4)		VMD0455	Motor Bracket	1	
134 (4)		VMD0452	Cassette Guide	1	
135 (4)		VMD0453	Safety Tab Knob	1	
136 (4)		VMB1091	Safety Tab Spring	1	
137 (4)		VMD0454	Spring Holder	1	
138 (4)		VMB1089	Wiper Spring (L)	1	
139 (4)		VDG0115	Wiper Gear	1	
140 (4)		VML1436	Wiper Arm	2	
141 (4)		VDG0116	Wiper Gear	1	
142 (4)		VMB1090	Wiper Spring (R)	1	
143 (4)		VGD0120	Gear	2	
144 (4)		VMD0456	Stopper Ring	1	
145 (4)		VDG0118	Cluth Gear	1	
146 (4)		VDP0839	Guide Roller	4	
147 (4)		VDG0117	Warm Wheel	1	
148 (4)		VMB1093	Clutch Spring	1	
149 (4)		VMS2304	Main Shaft	1	
150 (4)		VMA6134	Cover Angle	1	
151 (4)		VMA6063	Chassis Holder Angle (L)	1	
152 (4)		VMA6062	Chassis Holder Angle (R)	1	
153 (4)		VMA6073	Switch Angle	1	
154 (4)		WSM0046	Switch	2	
155 (4)		VXA0716	Side Plate (R) Unit	1	
156 (4)		VXA0717	Side Plate (L) Unit	1	
157 (4)		WDG0119	Shaft Gear	2	
158 (4)		VMD0459	Front Guide (R)	1	
159 (4)		VMD0449	Front Guide (L)	1	
160 (4)		VXA1754	Warm Shaft Pulley Unit	1	
161 (4)		VXA0714	Cassette Holder 1 Unit	1	
162 (4)		VML1437	Front Opener Link	1	
163 (5)		VMP0264	LCD Angle	1	
164 (5)		VHN0017	Clip	1	
165 (5)		VMA6075	Holder Angle	4	
166 (5)		VMA6078	AC Cord Support Angle	1	⚠
167 (5)		VGN1989	AC Cord Panel	1	
168 (5)		VJF0107	AC Cord Bushing	1	
169 (5)		VJA0111	AC Cord	1	⚠
170 (5)		VGQ0419	Power IC Cover	1	
171 (5)		VSC0842	Power IC Heat Sink	1	
172 (5)		ETP69WS1E	Power Transformer	1	NV-777E,EG ⚠
172 (5)		VTP0083	Power Transformer	1	NV-777B ⚠
173 (5)		VMG0272	RF Converter Bushing	1	
174 (5)		VGN1991	RF Converter Panel	1	
175 (5)		VSC0858	Shield Case (Upper)	1	
176 (5)		VSC0859	Shield Case (Under)	1	
177 (5)		VGQ0416	Infra Remocon Holder	1	
178 (5)		VKA0026	Rubber Foot	4	
179 (5)		VGN1993	Preset VR Plate	1	NV-777E,EG
179 (5)		VGN2054	Preset VR Plate	1	NV-777B
180 (5)		VGQ0415	Preset VR Case	1	
181 (5)		VMP0262	Video PC Board Angle	1	
182 (5)		VGT0311	Slow Tracking Knob	1	
183 (5)		VGT0306	Knob	2	
184 (5)		VGQ0414	Support	2	
185 (5)		VMP0263	Servo, Syscon PC Board	1	
			Angle		
186 (5)		VMA6146	PC Board Angle	1	NV-777E,EG
186 (5)		VMA6156	PC Board Angle	1	NV-777B

Ref. No.		Part No.	Part Name & Description	Pcs / Set	Remarks
191 (6)		VQL1800	Top Smoke Sheet	1	
192 (6)		VYP0707	Top Panel Unit	1	
193 (6)		VSC0832	Shield Plate	1	
194 (6)		VGQ0430	Hall Cap	1	
195 (6)		VYK0444	Preset Cover Unit	1	
196 (6)		VHD0108	Screw	4	
197 (6)		VXA0715	Blinder Panel Unit	1	
198 (6)		VGT0304	Slide Button	1	
199 (6)		VMB1092	Blinder Spring	1	
200 (6)		VYP0706	Front Panel Unit	1	
201 (6)		VGU0595	Timer Rec Button	1	
202 (6)		VMB1086	Timer Rec Spring	1	
203 (6)		VKF0189	Timer Door	1	
204 (6)		VHD0059	Screw	6	
205 (6)		VKU0184	Bottom Plate	1	
206 (6)		VKW0161	Top Smoke Panel	1	
207 (7)		VYK0430	Top Case Unit	1	
208 (7)		VYK0473	Bottom Case Unit	1	
209 (7)		VYK0474	Battery Cover Unit	1	
210 (7)		VKW0066	Filer Plate	1	
211 (7)		VGU0616	Rubber Plate	1	
212 (8)		VPG1204	Packing Case	1	NV-777EG
212 (8)		VPG1227	Packing Case	1	NV-777E
212 (8)		VPG1228	Packing Case	1	NV-777B
213 (8)		VPN0812	Cushion (L)	1	
214 (8)		VPN0813	Cushion (R)	1	
215 (8)		VPF0114	Polyethylene Bag	1	
216 (8)		VQF0916	Fan Bag Kit	1	NV-777EG ⚠
216 (8)		VQF0917	Fan Bag Kit	1	NV-777E ⚠
216 (8)		VQF0918	Fan Bag Kit	1	NV-777B ⚠
217 (8)		VJA0130	Din Cable	1	
218 (8)		NV-A17-E	Remote Control Unit	1	(Sales)
219 (3)		VSS0060	Mode Select Switch	1	
220 (4)		VMS2305	Slider Roler Pin	2	
221 (4)		VMD0448	Slider(L)	1	
222 (4)		VMD0450	Slider(R)	1	

Ref. No.		Part No.	Part Name & Description	Pcs / Set	Remarks
			Washer		
350 (1,2,3)		XWXV4D9		7	
351 (1)		XWG4		1	
352 (1)		XWXV4Y9		1	
353 (3)		XWXV3F8		1	
354 (2,3)		XWXV3D6		12	
355 (3)		XWC3B		1	
356 (3)		XWXV3Z6		1	
357 (3)		XWXV3A6		1	
358 (2)		XWA3B		1	
359 (2)		XWXV4D11		3	
360 (6)		XWGV3D6		1	
361 (1,2,3)		XUEV4FP		13	
362 (1,2,3,4)		XUC3FP		8	
363 (1,2,3)		XUC25FP		7	
364 (4)		XUC4FP		2	
365 (2,3,4)		XUEV3FP		10	
366 (1)		XNG3BS		1	
367 (1)		XNG4BS		1	
368 (2)		XNG3CS		1	
369 (4)		XWGV4D9		3	
370 (4)		XWGV4D11		2	
371 (3)		XWXV51F66		1	
			Screw		
300 (1,2)		XYN3+F8S		3	
301 (1)		XYN3+F12S		4	
302 (1)		XYN2+C5		1	
303 (1,2,3,4,5)		XTV3+8F		38	
304 (1,4)		XYN3+C4S		4	
305 (1)		XSN3D+10S		1	
306 (1)		XSS26+6		1	
307 (1)		XYN3+C8S		3	
308 (3,4,6)		XTV3+6F		16	
309 (3)		XTV3+8J			
310 (1,3)		XYN3+C6S		2	
311 (3,2)		XYN3+F6S		3	
312 (3)		XYN3+F10S		1	
313 (3)		XSS3+4S		3	
314 (3,5)		XTV3+10F		4	
315 (3)		XTV3+10G		1	
316 (4)		XTB3+8FK		4	
317 (4)		XTB3+8FK		6	
318 (4)		XTN2+8F		2	
319 (2)		XYC3+BF8		1	
320 (2)		XYN2+F10		2	
321 (2)		XSN3+10S		1	
322 (6)		XTV3+8JR		2	
323 (5,6)		XTV3+8FR		9	
324 (5)		XYN3+C6		1	
325 (5)		XTV3+12JK		1	
326 (5)		XTV3+10JK		2	
327 (5)		XTV4+15A		3	
328 (5)		XSS3+10K		4	
329 (5)		XTV3+8G		2	
330 (5)		XTV3+10GR		5	

Ref. No.		Part No.	Part Name & Description	Pcs / Set	Remarks
331 (1)		XXE2D25FP		1	
332 (1)		XYN3+B10BNS		2	
333 (7)		XTB2+4G		7	
334 (7)		XTN26+4G		1	
335 (7)		XTN3+6G		1	

ELECTRICAL REPLACEMENT PARTS LIST

Model No. NV-777E/EG/B

Notes:
1. * Be sure to make your orders of replacement parts according to this list.
2. IMPORTANT SAFETY NOTICE
   Components identified by ⚠ have special characteristics important for safety.
   When replacing any of these components, use only the original ones.
3. Unless otherwise specified,
   All resistors are in OHMS (Ω), 1/4W ± 5% carbon. K=1,000Ω, M=1,000KΩ.
   All capacitors are in MICROFARADS (μF), ± 10% P=μμF.

Ref. No.		Part No.	Part Name & Description	Pcs / Set	Remarks
		VEP01108A	AC P. C. BOARD UNIT	1	⚠
		VEP02155A	SERVO P. C. BOARD UNIT	1	
		VEP03150A	LUMINANCE, CHROMINANCE	1	NV-777E, B
			AUDIO P. C. BOARD UNIT		
		VEP03150B	LUMINANCE, CHROMINANCE	1	NV-777EG
			AUDIO P. C. BOARD UNIT		
		VEP06176A	OPERATION P. C. BOARD UNIT	1	
		VEP06177A	E. COUNTER & TAPE REMAIN	1	
			P. C. BOARD UNIT		
		VEP06178A	INFRARED REMOTE CONTROL	1	
			RECIEVER P. C. BOARD UNIT		
		VEP06179A	POWER SUPPLY & SYSTEM	1	
			CONTROL P. C. BOARD UNIT		
		VEP07147A	TIMER DECODER P. C. BOARD	1	NV-777E, EG
			UNIT		
		VEP07147B	TIMER DECODER P. C. BOARD	1	NV-777B
			UNIT		
		VEP07148A	TIMER OPERATION P. C.	1	
			BOARD UNIT		
		VEP07149A	TV DEMODULATOR P. C.	1	NV-777E, EG
			BOARD UNIT		
		VEP07149B	TV DEMODULATOR P. C.	1	NV-777B
			BOARD UNIT		
		VJB00636	TAKE-UP PHOTO SENSOR	1	
			P. C. BOARD		
		VJB00639	SENSOR LED P. C. BOARD	1	
		VJB00744	SUPPLY PHOTO SENSOR	1	
			P. C. BOARD		
		VJB00971	POWER IC HEATSINK P. C.	1	
			BOARD		
		VJB00972	REEL MOTOR HEATSINK	1	
			P. C. BOARD		
		VJB00968	MOTOR CONNECTION P. C.	1	
			BOARD		
		VJB00969	FRONT LOADING MOTOR	1	
			CONNECTION P. C. BOARD		

Ref. No.		Part No.	Part Name & Description	Pcs / Set	Remarks
		VJB00970	REEL SENSOR P. C. BOARD	1	
		ENC17551	RF CONVERTER UNIT	1	NV-777E, EG ⚠
		ENC17552	RF CONVERTER UNIT	1	NV-777B ⚠
		ENPE725	ANTENNA BOOSTER	1	NV-777E, EG ⚠
		ENPE726	ANTENNA BOOSTER	1	NV-777B ⚠
		TNV77759F2	TUNER UNIT	1	NV-777E, EG ⚠
		TNV87521F2	TUNER UNIT	1	NV-777B ⚠
		ETP69WS1E	POWER TRANSFORMER	1	NV-777E,EG ⚠
		VTP0083	POWER TRANSFORMER	1	NV-777B ⚠
		VEP01108A	AC P. C. Board Unit		
			Diodes		
D1013		30D1		1	⚠
D1014-1017		10E1		4	⚠
D1018		30D1		1	⚠
			Capacitor		
C1014		ECKF1H103ZF	Ceramic 50V 0.01	1	
			Coil		
L1001		VTQ0018		1	⚠
			Connectors		
P1103		VJP1144	6P	1	
P1105,1106		VJP1141	2P	2	
			Miscellaneous		
F1001		XBA2C10TRO	Fuse 1A	1	⚠
F1002-1004		XBA2C315TRO	Fuse 3.5A	3	⚠
		TJC6320	Fuse Holder	8	⚠

Ref. No.		Part No.	Part Name & Description	Pcs / Set	Remarks
		VEP02155A	Servo P. C. Board Unit		
			Integrated Circuits		
IC2001		MN6168VIA		1	
IC2002		AN6357		1	
IC2003		AN6346N		1	
IC2004		μPC339C		1	
IC2005		BAL6309		1	
IC2006		μPD1511C		1	
IC2007		MN6283		1	
IC2008		AN6676		1	
IC2009		STA321A		1	
IC2010		AN6677		1	
IC2011		μPC358C		1	
			Transistors		
Q2001		2SD636		1	
Q2002,2003		2SB641		2	
Q2004		2SD636		1	
Q2005,2006		2SB641		2	
Q2007		2SD636		1	
Q2008		2SB641		1	
Q2009		2SD636		1	
Q2010,2011		2SB641		2	
Q2012-2014		2SD636		3	
Q2015		2SB641		1	
Q2016		2SD636		1	
Q2018		2SB641		1	
Q2019-2021		2SD636		3	
Q2022		2SB641		1	
Q2023,2024		2SD636		2	
Q2027		2SD636		1	
Q2028		2SD889		1	
Q2029		2SD636		1	
			Diodes		
D2001-2008		MA165		8	
D2009		RD18EB	Zener	1	
D2010-2018		MA165		9	
D2019		RD7.5EB	Zener	1	
D2020		RD6.2EB	Zener	1	
D2021		OA90		1	
D2022,2023		MA165		2	
D2025,2026		MA165		2	
D2028,2029		MA165		2	
D2030		10E1FA8		1	
D2031-2036		MA165		1	
			Resistors		
R2001-2003		ERDS2TJ104	100K	3	
R2004		ERDS2TJ683	68K	1	
R2005		ERDS2TJ473	47K	1	
R2006		ERDS2TJ103	10K	1	
R2008		ERDS2TJ563	56K	1	
R2009,2010		ERDS2TJ154	150K	2	
R2011		ERDS2TJ333	33K	1	

Ref. No.		Part No.	Part Name & Description	Pcs / Set	Remarks
R2012		ERDS2TJ124	120K	1	
R2013		ERDS2TJ154	150K	1	
R2014		ERDS2TJ332	3.3K	1	
R2015		ERDS2TJ104	100K	1	
R2016		ERDS2TJ223	22K	1	
R2017		ERDS2TJ823	82K	1	
R2018,2019		ERDS2TJ473	47K	2	
R2020		ERDS2TJ104	100K	1	
R2021		ERDS2TJ223	22K	1	
R2022		ERDS2TJ220	22	1	
R2023		ERDS2TJ104	100K	1	
R2024		EROS2TKG8201	Metal 8.2K	1	
R2025		EROS2TKG1102	Metal 11K	1	
R2026		ERDS2TJ562	5.6K	1	
R2027		ERDS2TJ224	220K	1	
R2028		ERDS2TJ333	33K	1	
R2029		ERDS2TJ224	220K	1	
R2030		ERDS2TJ333	33K	1	
R2031		ERDS2TJ683	68K	1	
R2032		ERDS2TJ103	10K	1	
R2033		ERDS2TJ103	10K	1	
R2034		ERDS2TJ104	100K	1	
R2035		ERDS2TJ222	2.2K	1	
R2036		ERDS2TJ472	4.7K	1	
R2037		ERDS2TJ393	39K	1	
R2038		ERDS2TJ104	100K	1	
R2039		EROS2TKG6802	Metal 68K	1	
R2040		ERDS2TJ103	10K	1	
R2041		EROS2TKG2702	Metal 27K	1	
R2042		ERDS2TJ102	1K	1	
R2043		EVN50AA00B15	Variable 100K	1	
R2044		ERDS2TJ682	6.8K	1	
R2045		EVNK6AA00B54	Variable 50K	1	
R2046		ERDS2TJ682	6.8K	1	
R2047		EVNK6AA00B54	Variable 50K	1	
R2048		ERDS2TJ221	220	1	
R2049		ERDS2TJ222	2.2K	1	
R2050		ERDS2TJ124	120K	1	
R2051		ERDS2TJ222	2.2K	1	
R2052		ERDS2TJ333	33K	1	
R2053		ERDS2TJ103	10K	1	
R2054		EVN38CA00B53	Variable 5K	1	
R2055-2057		ERDS2TJ103	10K	3	
R2058		ERDS2TJ223	22K	1	
R2059		ERDS2TJ105	1M	1	
R2060		ERDS2TJ223	22K	1	
R2061		ERDS2TJ103	10K	1	
R2062		ERDS2TJ223	22K	1	
R2063		ERDS2TJ561	560	1	
R2064		ERDS2TJ391	390	1	
R2065		ERDS2TJ391	390	1	
R2066		ERDS2TJ223	22K	1	
R2067,2068		ERDS2TJ471	470	2	
R2069,2070		ERDS2TJ223	22K	2	
R2071		ERDS2TJ105	1M	1	
R2072,2073		ERDS2TJ103	10K	2	
R2074		EVNK6AA00B15	Variable 100K	1	
R2075		ERDS2TJ473	47K	1	
R2076		EVN59AA00B15	Variable 100K	1	
R2077		ERDS2TJ102	1K	1	
R2078		EVN59AA00B15	Variable 100K	1	
R2079		ERDS2TJ102	1K	1	
R2080		ERDS2TJ103	10K	1	
R2081		ERDS2TJ392	3.9K	1	

Ref. No.		Part No.	Part Name & Description	Pcs / Set	Remarks
R2082		ERDS2TJ103	10K	1	
R2083		ERDS2TJ222	2.2K	1	
R2084		ERDS2TJ563	56K	1	
R2085		ERDS2TJ223	22K	1	
R2086		ERDS2TJ823	82K	1	
R2087		ERDS2TJ183	18K	1	
R2088		ERDS2TJ473	47K	1	
R2089		ERDS2TJ824	820K	1	
R2090		ERDS2TJ474	470K	1	
R2091		ERDS2TJ822	8.2K	1	
R2092		ERDS2TJ223	22K	1	
R2093		ERDS2TJ104	100K	1	
R2094		ERX12ANJR51P	Metal 1/2W 0.51	1	
R2095		ERDS2TJ222	2.2K	1	
R2096		ERDS2TJ221	220	1	
R2097,2098		ERDS2TJ223	22K	2	
R2099		ERDS2TJ183	18K	1	
R2100-2102		ERD2FCG330P	33	3	⚠
R2103		ERDS2TJ822	8.2K	1	
R2104		ERDS2TJ103	10K	1	
R2105		ERDS2TJ102	1K	1	
R2106		ERDS2TJ332	3.3K	1	
R2107-2110		ERDS2TJ104	100K	4	
R2111		ERQ1CJ6R8	Metal 1W 6.8	1	
R2112,2113		ERDS2TJ332	3.3K	2	
R2114		ERDS2TJ823	82K	1	
R2115		ERX12ANJR68	Metal 1/2W 0.68	1	
R2116-2118		ERD25TJ220	22	3	
R2119		ERDS2TJ153	15K	1	
R2120		ERDS2TJ123	12K	1	
R2121		ERDS2TJ102	1K	1	
R2122		EVN50AA00B15	Variable 100K	1	
R2123		ERDS2TJ221	220	1	
R2124		ERDS2TJ563	56K	1	
R2125		ERDS2TJ105	1M	1	
R2126		ERDS2TJ221	220	1	
R2127		ERDS2TJ102	1K	1	
R2128		ERDS2TJ104	100K	1	
R2129		ERDS2TJ332	3.3K	1	
R2130		ERDS2TJ823	82K	1	
R2131		ERDS2TJ272	2.7K	1	
R2132		ERDS2TJ103	10K	1	
R2133		ERDS2TJ822	8.2K	1	
R2134		ERDS2TJ274	270K	1	
R2135		ERDS2TJ104	100K	1	
R2136		ERDS2TJ822	8.2K	1	
R2137		ERDS2TJ101	100	1	
R2138		ERDS2TJ563	56K	1	
R2139		EVNK6AA00B15	Variable 100K	1	
R2140		ERDS2TJ154	150K	1	
R2141		ERDS2TJ391	390	1	
R2142		ERDS2TJ101	100	1	
R2143		ERDS2TJ473	47K	1	
R2145		ERDS2TJ104T	100K	1	
R2146		ERDS2TJ223T	22K	1	
R2147-2150		ERDS2TJ104T	100K	4	
R2151		ERDS2TJ561	560	1	
			Capacitors		
C2001		ECQM1H472KZ	Mylar 50V 4700P	1	

Ref. No.		Part No.	Part Name & Description	Pcs / Set	Remarks
C2002		ECEA1HS010	Electrolytic 50V 1	1	
C2003		ECEA0JS470	Electrolytic 6.3V 47	1	
C2004		ECQM1H563KV	Mylar 50V 0.056	1	
C2005		ECQM1H102KZ	Mylar 50V 1000P	1	
C2006		ECEA0JS470	Electrolytic 6.3V 47	1	
C2007		ECQM1H562KZ	Mylar 50V 5600P	1	
C2008		ECQV05104JB	Mylar 50V 0.1	1	
C2009		ECQM1H562KZ	Mylar 50V 5600P	1	
C2010,2011		ECEA0JS470	Electrolytic 6.3V 47	2	
C2012		ECEA1HN2R2S	Electrolytic 50V 2.2	1	
C2013		ECQM1H223KZ	Mylar 50V 0.022	1	
C2014		ECQM1H823KV	Mylar 50V 0.082	1	
C2015		ECEA1EN330S	Electrolytic 25V 33	1	
C2016		ECQM1H123KZ	Mylar 50V 0.012	1	
C2017		ECQV05334JZ	Mylar 50V 0.33	1	
C2018,2019		ECQM1H683KV	Mylar 50V 0.068	2	
C2020		ECQV05474JZW		1	
C2021		ECEA1DS100	Electrolytic 16V 10	1	
C2022		ECKF1H182KB	Ceramic 50V 1800P	1	
C2023		ECEA1HS010	Electrolytic 50V 1	1	
C2024		ECEA1CS100	Electrolytic 16V 10	1	
C2025		ECEA0JS470	Electrolytic 6.3V 47	1	
C2026		ECQM1H273KZ	Mylar 50V 0.027	1	
C2028		ECEA0JS101	Electrolytic 6.3V 100	1	
C2029-2031		ECQM1H682KZ	Mylar 50V 6800P	3	
C2032		ECEA1CS220	Electrolytic 16V 22	1	
C2033		ECEA1AS470	Electrolytic 10V 47	1	
C2034,2035		ECEA50ZR68	Electrolytic 50V 0.68	2	
C2036		ECEA1HS010	Electrolytic 50V 1	1	
C2037		ECQV05274JZ	Mylar 50V 0.27	1	
C2038		ECQM1H152KZ	Mylar 50V 1500P	1	
C2039,2040		ECCF1H330K5	Ceramic 50V 33P	2	
C2041		ECCF1H270K5	Ceramic 50V 27P	1	
C2042		ECCF1H050C5	Ceramic 50V 5P	1	
C2043		ECV1ZW20X53T	Trimmer 500V 20P	1	
C2044		ECEA0JS470	Electrolytic 6.3V 47	1	
C2045		ECQV05104JB	Mylar 50V 0.1	1	
C2046		ECQM1H393KS	Mylar 50V 0.039	1	
C2047-2049		ECEA50ZR33	Electrolytic 50V 0.33	3	
C2050		ECQM1H822KZ	Mylar 50V 8200P	1	
C2051		ECQM1H103KZ	Mylar 50V 0.01	1	
C2052		ECEA1ES101	Electrolytic 25V 100	1	
C2053		ECQV05334JZ	Mylar 50V 0.33	1	
C2054		ECEA1HS101	Electrolytic 50V 100	1	
C2055		ECEA1HS470	Electrolytic 50V 47	1	
C2056		ECEA1HS2R2	Electrolytic 50V 2.2	1	
C2057		ECEA1CS100	Electrolytic 16V 10	1	
C2058		ECQM1H822KZ	Mylar 50V 8200P	1	
C2059-2061		ECEA50ZR22	Electrolytic 50V 0.22	3	
C2062		ECSF35E3R3E	Tantalum 35V 3.3	1	
C2063		ECQM1H333KS	Mylar 50V 0.033	1	
C2064		ECQM1H103KZ	Mylar 50V 0.01	1	
C2065-2067		ECEA1HN010S	Electrolytic 50V 1	3	
C2068-2070		ECEA1HS2R2	Electrolytic 50V 2.2	3	
C2071		ECEA1CS100	Electrolytic 16V 10	1	
C2072		ECCF1H560K5	Ceramic 50V 56P	1	
C2073		ECQM1H102KZ	Mylar 50V 1000P	1	
C2074		ECQM1H103KZ	Mylar 50V 0.01	1	
C2075		ECQV05104JB	Mylar 50V 0.1	1	
C2076,2077		ECEA1CS100	Electrolytic 16V 10	2	
C2083		ECEA0JS470	Electrolytic 6.3V 47	1	
C2084		ECQV05334JZ	Mylar 50V 0.33	1	
C2085		ECQM1H102KZ	Mylar 50V 1000P	1	

Ref. No.	Part No.	Part Name & Description	Pcs / Set	Remarks
		Coils		
L2001	VLQEL06F101K	100μH	1	
L2002	VLQ80F102K	1mH	1	
	VLQEL06F561K	560μH	1	
		Diode Arrays		
D009	D009		1	
D010	D010		1	
		Crystals		
X2001	VSX0091		1	
X2002	VSX0082		1	
		Connectors		
P001	VJP1239	12P	1	
P2001	VJS1316	8P	1	
P2002	VJP1232	5P	1	
P2003,2004	VJS1314	10P	2	
P2006	VJP1229	2P	1	
P2008	VJS1314	10P	1	
P2010,2011	VJP1235	8P	2	
		Miscellaneous		
	VSC0845	Heat Sink	1	
	VSC0856	Heat Sink	1	
	VEP03150A/B	Luminance, Chrominance		
		Audio P. C. Board Unit		
		Integrated Circuits		
IC3001	VEFY003	FIC Y-3	1	
IC3002	AN6326		1	
IC3003	BA7004		1	
IC4001	TA7355P		1	
IC4002	AN6209		1	
IC4003	NE648N		1	
IC8001	VEFC003	FIC C-3	1	
IC8002	VEFC004	FIC C-4	1	
IC8003	BA7007		1	NV-777EG
		Transistors		
Q3001,3002	2SD636		2	
Q3003	2SB643		1	
Q3006,3007	2SD636		2	
Q3008	2SC2377		1	
Q3009	2SC2206		1	
Q3010	2SB641		1	
Q3011-3015	2SC2377		5	
Q3016	2SC2206		1	
Q3017-3020	2SD636		4	
Q3021	2SD638		1	
Q3022	2SC2206		1	
Q3023	2SC2377		1	
Q3024	2SD636		1	
Q3029	2SD636		1	

Ref. No.	Part No.	Part Name & Description	Pcs / Set	Remarks
Q3030	2SC2206		1	
Q3031	2SB641		1	
Q3032	2SD636		1	
Q3037	2SC2206		1	
Q4001	2SC1317		1	
Q4002,4003	2SD636		2	
Q4004	2SB641		1	(R, S, T)
Q4005	2SD636		1	
Q4006	2SB641		1	
Q4007	2SD655		1	or 2SD1330
Q4008,4009	2SD639		2	(R) or 2SD973(R)
Q8001	2SC2206		1	NV-777EG
Q8002	2SD636		1	
Q8003,8004	2SC2206		2	
Q8005	2SC2206		1	NV-777EG
Q8006	2SB643		1	
Q8007	2SD636		1	
		Diodes		
D3001,3002	MA165		2	
D3005	RD3.0EB	Zener	1	
D3006-3012	MA165		7	
D3016	MA165		1	
D3017,3018	ISS16		2	
D3020-3023	MA165		4	
D4001	MA165		1	
D4003-4013	MA165		11	
D8002	MA165		1	NV-777EG
		Resistors		
R3001,3002	ERDS2TJ563	56K	2	
R3003,3004	ERDS2TJ333	33K	2	
R3005	ERDS2TJ562	5.6K	1	
R3006	ERDS2TJ103	10K	1	
R3007	ERDS2TJ822	8.2K	1	
R3008	ERDS2TJ103	10K	1	
R3010	ERDS2TJ104	100K	1	
R3011,3012	ERDS2TJ750	75	2	
R3013	ERDS2TJ102	1K	1	
R3014	ERDS2TJ681	680	1	
R3015	ERDS2TJ271	270	1	
R3016	ERDS2TJ102	1K	1	
R2017,2018	ERDS2TJ104	100K	2	
R3019	ERDS2TJ222	2.2K	1	
R3020	ERDS2TJ100	10	1	
R3021	ERDS2TJ681	680	1	
R3022	EVNK6AA00B23	Variable 2K	1	
R3023	ERDS2TJ561	560	1	
R3024	ERDS2TJ820	82	1	
R3025	ERDS2TJ471	470	1	
R3026	ERDS2TJ563	56K	1	
R3027	ERDS2TJ473	47K	1	
R3028	ERDS2TJ562	5.6K	1	
R3029	ERDS2TJ122	1.2K	1	
R3030	ERDS2TJ152	1.5K	1	
R3031	ERDS2TJ821	820	1	
R3032	ERDS2TJ181	180	1	
R3033	ERDS2TJ560	56	1	
R3034,3035	ERDS2TJ682	6.8K	2	

Ref. No.	Part No.	Part Name & Description	Pcs / Set	Remarks
R3036,3037	ERDS2TJ560	56	2	
R3038	ERDS2TJ152	1.5K	1	
R3039	ERDS2TJ100	10	1	
R3040	ERDS2TJ821	820	1	
R3041	ERDS2TJ223	22K	1	
R3042	ERDS2TJ821	820	1	
R3043	ERDS2TJ100	10	1	
R3044-3046	EVNK6AA00B13	Variable 1K	3	
R3047-3049	ERDS2TJ473	47K	3	
R3050	ERDS2TJ102	1K	1	
R3051,3052	ERDS2TJ152	1.5K	2	
R3053	ERDS2TJ681	680	1	
R3054	ERDS2TJ561	560	1	
R3055	ERDS2TJ102	1K	1	
R3056	ERDS2TJ560	56	1	
R3057	ERDS2TJ152	1.5K	1	
R3058	ERDS2TJ102	1K	1	
R3059	ERDS2TJ103	10K	1	
R3060	ERDS2TJ102	1K	1	
R3061	ERDS2TJ271	270	1	
R3062	ERDS2TJ102	1K	1	
R3063	ERDS2TJ821	820	1	
R3064	ERDS2TJ223	22K	1	
R3065,2066	ERDS2TJ473	47K	2	
R3067	ERDS2TJ103	10K	1	
R3068,3069	EVJ1EAF20B15	Variable 100K	2	
R3070,3071	ERDS2TJ561	560	2	
R3072	ERDS2TJ392	3.9K	1	
R3073	ERDS2TJ152	1.5K	1	
R3074	ERDS2TJ102	1K	1	
R3075	ERDS2TJ331T	330	1	
R3076	ERDS2TJ102T	1K	1	
R3077	ERDS2TJ821T	820	1	
R3078	ERDS2TJ222T	2.2K	1	
R3079	ERDS2TJ103T	10K	1	
R3080	ERDS2TJ683T	68K	1	
R3082,3083	ERDS2TJ563T	56K	2	
R3091,3092	ERDS2TJ104T	100K	2	
R3094	EVNK6AA00B13	Variable 1K	1	
R3095	ERDS2TJ562T	5.6K	1	
R3096	ERDS2TJ183T	18K	1	
R3097	ERDS]TJ181T	180	1	
R3098	ERDS2TJ121T	120	1	
R3099	ERDS2TJ561T	560	1	
R3100	ERDS2TJ101T	100	1	
R3101	ERDS2TJ470T	47	1	
R3102	ERDS2TJ391T	390	1	
R3103	ERDS2TJ272T	2.7K	1	
R3104	ERD50TJ221S	220	1	
R3105,3106	ERDS2TJ102	1K	2	
R3107	ERDS2TJ750	75	1	
R3108	ERDS2TJ682	6.8K	1	
R3109	ERDS2TJ152	1.5K	1	
R3110	ERDS2TJ562	5.6K	1	
R3129	ERDS2TJ272	2.7K	1	
R3130	ERDS2TJ561	560	1	
R3131	EVJ0EAF20B23	Variable 2K	1	
R3132	ERDS2TJ473	47K	1	
R3133,3134	ERDS2TJ223	22K	2	
R3135	ERDS2TJ563	56K	1	
R3136	ERDS2TJ822	8.2K	1	
R3137	ERDS2TJ223	22K	1	
R3138	ERDS2TJ473	47K	1	
R3140	ERDS2TJ153	15K	1	
R4001	ERDS2TJ472	4.7K	1	

Ref. No.	Part No.	Part Name & Description	Pcs / Set	Remarks
R4002	ERDS2TJ473	47K	1	
R4003	ERDS2TJ123	12K	1	
R4004	ERDS2TJ331	330	1	
R4005	ERDS2TJ472	4.7K	1	
R4006,4007	ERDS2TJ333	33K	2	
R4008	ERDS2TJ103	10K	1	
R4009	ERDS2TJ472	4.7K	1	
R4010	ERDS2TJ101	100	1	
R4011	ERDS]TJ682	6.8K	1	
R4012	ERDS2TJ223	22K	1	
R4013	ERDS2TJ333	33K	1	
R4014	ERDS2TJ101	100	1	
R4015	ERDS2TJ473	47K	1	
R4016	ERDS2TJ152	1.5K	1	
R4017	ERDS2TJ222	2.2K	1	
R4018	ERDS2TJ103	10K	1	
R4019	ERDS2TJ332	3.3K	1	
R4020	EVNK6AA00B24	Variable 20K	1	
R4021	ERDS2TJ472	4.7K	1	
R4022	ERDS2TJ104	100K	1	
R4023,4024	ERDS2TJ153	15K	2	
R4025	EVNK6AA00B24	Variable 20K	1	
R4026,4027	ERDS2TJ102	1K	2	
R4028	ERDS2TJ184	180K	1	
R4029	ERDS2TJ274	270K	1	
R4030	ERDS2TJ823	82K	1	
R4031	ERDS2TJ473	47K	1	
R4032	ERDS2TJ332	3.3K	1	
R4033	ERDS2TJ181	180	1	
R4034	ERDS2TJ561	560	1	
R4035	ERDS2TJ151	150	1	
R4036	ERDS2TJ473	47K	1	
R4037	ERDS2TJ274	270K	1	
R4038	ERDS2TJ103	10K	1	
R4039	ERDS2TJ104	100K	1	
R4040	ERDS2TJ473	47K	1	
R4041	ERDS2TJ181	180	1	
R4042,4043	ERDS2TJ223	22K	2	
R4044	ERDS2TJ103	10K	1	
R4045	ERDS2TJ332	3.3K	1	
R4046	ERDS2TJ102	1K	1	
R4047	ERDS2TJ223	22K	1	
R4048	ERDS2TJ273	27K	1	
R4049	ERDS2TJ473	47K	1	
R4050	ERDS2TJ153	15K	1	
R4051	ERDS2TJ562	5.6K	1	
R4052	ERDS2TJ683	68K	1	
R4053	ERDS2TJ183	18K	1	
R4054	ERDS2TJ333	33K	1	
R4055	ERDS2TJ4R7	4.7	1	
R4056	EVNK6AA00B15	Variable 100K	1	
R4057	ERDS2TJ153	15K	1	
R4058	ERDS2TJ4R7	4.7	1	
R4059	ERDS2TJ223	22K	1	
R4060	ERDS2TJ681	680	1	
R4061	ERDS2TJ105	1M	1	
R4062	ERDS2TJ562	5.6K	1	
R4064	ERDS2TJ153	15K	1	
R4065	ERDS2TJ103	10K	1	
R8001-8003	ERDS2TJ102	1K	3	
R8004	ERDS2TJ681	680	1	NV-777EG
R8005	ERDS2TJ183	18K	1	NV-777EG
R8006	ERDS2TJ103	10K	1	NV-777EG
R8007	ERDS2TJ471	470	1	

Ref. No.	Part No.	Part Name & Description	Pcs / Set	Remarks
R8008-8011	ERDS2TJ102	1K	4	
R8012	ERDS2TJ562	5.6K	1	
R8013	ERDS2TJ471	470	1	
R8014,8015	ERDS2TJ102	1K	2	
R8016	ERDS2TJ124	120K	1	
R8017	ERDS2TJ223	22K	1	
R8018	ERDS2TJ271	270	1	
R8019	ERDS2TJ222	2.2K	1	
R8020	ERDS2TJ123	12K	1	
R8021	ERDS2TJ123	12K	1	
R8022	ERDS2TJ102	1K	1	
R8023	ERDS2TJ391	390	1	
R8024	ERDS2TJ562	5.6K	1	
R8025	ERDS2TJ473	47K	1	
R8026	ERDS2TJ273	27K	1	
R8027	ERDS2TJ222	2.2K	1	
R8028	ERDS2TJ273	27K	1	NV-777EG
R8029	ERDS2TJ473	47K	1	NV-777EG
R8030	ERDS2TJ472	4.7K	1	NV-777EG
R8031	ERDS2TJ102	1K	1	NV-777EG
R8032	ERDS2TJ222	2.2K	1	NV-777EG
R8033	EVNK6AA00B23	Variable 2K	1	
R8034	ERDS2TJ471	470	1	
R8035	ERDS2TJ152	1.5K	1	
R8036	ERDS2TJ271	270	1	
R8037	EVNK6AA00B52	Variable 500	1	
R8038	ERDS2TJ102	1K	1	
R8039	ERDS2TJ563	56K	1	
R8040	ERDS2TJ561T	560	1	
R8041	ERDS2TJ473T	47K	1	NV-777EG
R8042	ERDS2TJ560T	56	1	NV-777EG
R8043	ERDS]TJ222T	2.2K	1	VN-777EG
R8044	ERDS2TJ154T	150K	1	NV-777EG
R8045	ERDS2TJ564T	560K	1	NV-777EG
R8046	ERDS2TJ271T	270	1	NV-777EG
R8047	ERDS2TJ471T	470	1	
R8048,8049	ERDS2TJ563T	56K	2	
		Capacitors		
C3003	ECEA1HNR47S	Electrolytic 50V 0.47	1	
C3004	ECEA1HS010	Electrolytic 50V 1	1	
C3005	ECEA0JS470	Electrolytic 6.3V 47	1	
C3006	ECCF1H390KD	Ceramic 50V 39P	1	
C3007	ECEA0JS470	Electrolytic 6.3V 47	1	
C3008	ECEA1HS2R2	Electrolytic 50V 2.2	1	
C3009	VCY25333KX	Semiconductor 25V 0.033	1	
C3010	ECEA0JS101	Electrolytic 6.3V 100	1	
C3011,3012	ECEA1HS010	Electrolytic 50V 1	2	
C3013	ECKF1H221KB	Ceramic 50V 220p	1	
C3014	ECEA1CS100	Electrolytic 16V 10	1	
C3015	ECEA1ES4R7	Electrolytic 25V 4.7	1	
C3016	ECEA1HS2R2	Electrolytic 50V 2.2	1	
C3017	ECKF1H102KB	Ceramic 50V 1000P	1	
C3018	ECEA0JS470	Electrolytic 6.3V 47	1	
C3019	ECCF1H560KD	Ceramic 50V 56	1	
C3020	ECCF1H181KC	Ceramic 50V 180P	1	
C3021	ECEA1CS470	Electrolytic 16V 47	1	
C3022	ECEA0JS470	Electrolytic 6.3V 47	1	
C3023	ECEA1CS100	Electrolytic 16V 10	1	
C3024	ECKF1H681KB	Ceramic 50V 680P	1	

Ref. No.	Part No.	Part Name & Description	Pcs / Set	Remarks
C3025,3026	ECKF1H103ZF5	Ceramic 50V 0.01	2	
C3027	ECEA1HS010	Electrolytic 50V 1	1	
C3028	ECEA1CS100	Electrolytic 16V 10	1	
C3029,3030	ECV1ZW40X64	Trimmer 500V 40P	2	
C3031,3032	VCY25104KX	Semiconductor 25V 0.1	2	
C3033	ECV1ZW40X64	Trimmer 500V 40P	1	
C3034	ECEA1CS100	Electrolytic 16V 10	1	
C3035	ECKF1H103ZF	Ceramic 50V 0.01	1	
C3036	ECEA0JS470	Electrolytic 6.3V 47	1	
C3037	ECQV05104JB	Mylar 50V 0.1	1	
C3038	ECEA0JS470	Electrolytic 6.3V 47	1	
C3039	VCY25104KX	Semiconductor 25V 0.1	1	
C3040	ECEA1HS010	Electrolytic 50V 1	1	
C3041	ECEA1CS100	Electrolytic 16V 10	1	
C3042	ECKF1H103ZF	Ceramic 50V 0.01	1	
C3043	ECCF1H151KC	Ceramic 50V 150	1	
C3044	ECCF1H271KC	Ceramic 50V 270P	1	
C3045	VCKD1H431JS	Ceramic 50 430P	1	
C3046	ECCF1H271KC	Ceramic 50V 270P	1	
C3047	ECCF1H561K5	Ceramic 50V 560P	1	
C3048	ECCF1H560KC	Ceramic 50V 56P	1	
C3049	ECCF1H220KC	Ceramic 50V 22P	1	
C3050	ECKF1H103ZF	Ceramic 50V 0.01	1	
C3051	ECEA1CS330	Electrolytic 16V 33	1	
C3052	ECKF1H103ZF5	Ceramic 50V 0.01	1	
C3053	ECCF1H820KC	Ceramic 50V 82P	1	
C3055	ECCF1H120KC	Ceramic 50V 12P	1	
C3056-3059	ECKF1H103ZF	Ceramic 50V 0.01	4	
C3060	ECCF1H221KC	Ceramic 50V 220P	1	
C3061	ECEA1HNR478	Electrolytic 50V 0.47	1	
C3062	ECCF1H101KC	Ceramic 50V 100P	1	
C3063	ECEA1CS100	Electrolytic 16V 10	1	
C3064	ECEA0JS470	Electrolytic 6.3V 47	1	
C3065	ECCF1H820KC	Ceramic 50V 82P	1	
C3066	ECQM1H102KZ	Mylar 50V 1000P	1	
C3067	VCKD1H331JSA	Ceramic 50V 330P	1	
C3068	ECKF1H561KB	Ceramic 50V 560P	1	
C3069	ECKF1H102KB	Ceramic 50V 1000P	1	
C3070	ECKF1H821KB	Ceramic 50V 820P	1	
C3071	ECEA0JS471	Electrolytic 6.3V 470	1	
C3072	ECEA1CS101	Electrolytic 16V 100	1	
C3073	ECEA1CS100	Electrolytic 16V 10	1	
C3079,3080	ECQM1H332KZ	Mylar 50V 3300P	2	
C3081	ECEA1CS100	Electrolytic 16V 10	1	
C3082	ECEA1CS100	Electrolytic 16V 10	1	
C3083	ECEA1ES4R7	Electrolytic 25V 4.7	1	
C3084	ECEA1CS100	Electrolytic 16V 10	1	
C3085	VCY25104KX	Semiconductor 25V 0.1	1	
C3087	VCY25104KX	Semiconductor 25V 0.1	1	
C3088,3089	ECKF1H103ZF	Ceramic 50V 0.01	2	
C3090	ECKF1H222KB	Ceramic 50V 2200P	1	
C4001	ECKF1H102KB	Ceramic 50V 1000P	1	
C4002	ECEA1HS3R3	Electrolytic 50V 3.3	1	
C4004	ECEA1CS330	Electrolytic 16V 33	1	
C4005	ECEA1HS3R3	Electrolytic 50V 3.3	1	
C4006	ECEA1CS100	Electrolytic 16V 10	1	
C4007	ECKF1H102KB	Ceramic 50V 1000P	1	
C4008	ECEA1AS330	Electrolytic 10V 33	1	
C4009	ECEA1SD330	Electrolytic 10V 33	1	
C4010	ECQV05183JZ	Mylar 50V 0.018	1	
C4011	ECQV05334JZ	Mylar 50V 0.33	1	
C4012	ECEA1AS221	Electrolytic 10V 220	1	
C4013	ECKF1H102KB	Ceramic 50V 1000P	1	
C4014	ECEA1CS100	Electrolytic 16V 10	1	
C4015	ECKF1H102KB5	Ceramic 50V 1000P	1	

Ref. No.	Part No.	Part Name & Description	Pcs / Set	Remarks
C4016	ECQV05683JZ	Mylar 50V 0.068	1	
C4017	ECEA1AS470	Electrolytic 10V 47	1	
C4018-4021	ECEA1CS100	Electrolytic 16V 10	4	
C4022	ECEA0JS101	Electrolytic 6.3V 100	1	
C4023	ECKF1H102KB	Ceramic 50V 1000P	1	
C4024	ECEA1AS221	Electrolytic 10V 220	1	
C4025	ECEA1CS221	Electrolytic 16V 220	1	
C4026	ECSF35ER33E	Tantalum 35V 0.33	1	
C4027	ECSF35ER1E	Tantalum 35V 0.1	1	
C4028	ECEA1CS100	Electrolytic 16V 10	1	
C4029	ECQM1H473JV	Mylar 50V 0.047	1	
C4030	ECQM1H472JZ	Mylar 50V 4700P	1	
C4031	ECEA1CS100	Electrolytic 16V 10	1	
C4032	ECQM1H273JZ	Mylar 50V 0.027	1	
C4033	ECQM1H562JZ	Mylar 50V 5600P	1	
C4034	ECEA1HN010S	Electrolytic 50V 1	1	
C4035	ECKF1H102KB	Ceramic 50V 1000P	1	
C4036	ECQM1H822JZ	Mylar 50V 8200P	1	
C4037	ECKF1H102KB	Ceramic 50V 1000P	1	
C4038	ECEA1CS470	Electrolytic 16V 47	1	
C4039	ECEA1HS3R3	Electrolytic 50V 3.3	1	
C4040	ECEA1CS221	Electrolytic 16V 220	1	
C4041	ECEA1CS101	Electrolytic 16V 100	1	
C4042	VCY25333KX	Semiconductor 25V 0.033	1	
C4043	ECKDF1H103ZF	Ceramic 50V 0.01	1	
C4044	ECEA10S100	Electrolytic 16V 10	1	
C4045	ECCF2H121K2	Ceramic 500V 120P	1	
C4046	ECQF6152KZH	Mylar 630V 1500P	1	
C4047	ECEA1CS100	Electrolytic 16V 10	1	
C4048	VCY25333KX	Semiconductor 25V 0.033	1	
C4049	ECKF1H103ZF	Ceramic 50V 0.01	1	
C4050	ECQM2223KZ	Mylar 200V 0.022	1	
C8001	ECEA0JS470	Electrolytic 6.3V 47	1	
C8002	ECKF1H102KB	Ceramic 50V 1000P	1	NV-777EG
C8003	ECQV05154JZ	Mylar 50V 0.15	1	
C8004	ECQV05104JB	Mylar 50V 0.1	1	NV-777EG
C8005	ECCF1H390KC	Ceramic 50V 39P	1	
C8006	ECEA1AS330	Electrolytic 10V 33	1	
C8007	ECEA10S100	Electrolytic 16V 10	1	
C8008	ECEA1AS330	Electrolytic 10V 33	1	
C8009	ECCF1H030CC	Ceramic 50V 3P	1	
C8010	ECV1ZW30X64	Trimmer 500V 30P	1	
C8011	ECCF1H010CC	Ceramic 50V 1P	1	
C8012	ECEA1CS100	Electrolytic 16V 10	1	
C8013	ECKF1H122KB	Ceramic 50V 1200P	1	
C8014	ECEA1HS010	Electrolytic 50V 1	1	
C8015	ECKF1H103ZF	Ceramic 50V 0.01	1	
C8016	ECEA1CS100	Electrolytic 16V 10	1	
C8017	ECCF1H121KC	Ceramic 50V 120P	1	
C8018	ECKF1H103ZF	Ceramic 50V 0.01	1	
C8019	ECCF1H101KC	Ceramic 50V 100P	1	
C8020	ECKF1H103ZF	Ceramic 50V 0.01	1	
C8021	ECKR1H103ZF5	Ceramic 50V 0.01	1	NV-777EG
C8022	ECEA1HS2R2	Electrolytic 50V 2.2	1	
C8023,8024	ECEA1CS100	Electrolytic 16V 10	2	
C8025	ECKF1H102KB	Ceramic 50V 1000P	1	
C8026,8027	ECEA1AS330	Electrolytic 10V 33	2	
C8028	ECEA1HS010	Electrolytic 50V 1	1	
C8029	ECEA50ZR1	Electrolytic 50V 0.1	1	
C8030	ECKF1H103ZF	Ceramic 50V 0.01	1	NV-777EG
C8031	ECEA1AS330	Electrolytic 10V 33	1	NV-777EG
C8032	ECEA1CS100	Electrolytic 16V 10	1	NV-777EG
C8033	ECKF1H103ZF	Ceramic 50V 0.01	1	NV-777EG
C8034	ECCF1H330KC	Ceramic 50V 33P	1	NV-777EG

Ref. No.	Part No.	Part Name & Description	Pcs / Set	Remarks
C8035	ECQM1H563JV	Mylar 50V 0.056	1	NV-777EG
C8036	ECEA1CS101	Electrolytic 16V 100	1	NV-777EG
C8037	ECCF1H390KC	Ceramic 50V 39P	1	
C8038	ECKF1H103ZF	Ceramic 50V 0.01	1	
C8039	ECCF1H151KC	Ceramic 50V 150P	1	
		Coils		
L3001-3003	VLQEL06R101K	100μH	3	
L3004	VLQEL06R820K	82μH	1	
L3005	VLQEL06R101K	100μH	1	
L3006	VLQEL06R100K	10μH	1	
L3007,3008	VLQEL06R101K	100μH	2	
L3009	VLQ80W102K	1mH	1	
L3010	VLQEL06R180K	18μH	1	
L3011	VLQEL06R2R7K	2.7μH	1	
L3012	VLQEL06R151K	150μH	1	
L3013	VLQEL06R471K	470μH	1	
L3014	VLQEL06R220K	22μH	1	
L3015	VLQEL06R100K	10μH	1	
L3016	VLQEL06R180K	18μH	1	
L3017,3018	VLQEL06R101K	100μH	2	
L3019,3020	VLQEL06R8R2K	8.2μH	2	
L3021,3022	VLQEL06R220K	22μH	2	
L3023	VLQEL06R101K	100μH	1	
L3025	VLQEL06R101K	100μH	1	
L3026	VLQEL06R180K	18μH	1	
L4001	VTQ0014		1	
L4002,4003	VLQEL06F471K	470μH	2	
L8001	VLQEL06F101K	100μH	1	
L8002	VLQ80W681K	680μH	1	
L8003	VLQEL06F390K	39μH	1	NV-777EG
L8004	VLQEL06R390K	39μH	1	
L8005	VLQEL06F101K	100μH	1	
L8006	VLQEL06F560K	56μH	1	
L8007	VLQEL06F680K	68μH	1	
L8008	VLQEL06F470K	47μH	1	
L8009	VLQ02F682K	6.8mH	1	
L8010	VLQEL06F101K	100μH	1	
L8011	VLQEL06R101K	100μH	1	NV-777EG
L8012	ELM7Q207A	Variable 7μH	1	NV-777EG
L8013	VLQEL06F330K	33μH	1	
L8014	VLQEL06F101K	100μH	1	
L8015	VLQEL06F680K	68μH	1	
		Filters		
FL3001	VLF0196		1	
FL3002	VLF0212		1	
FL3003	VLF0188		1	
FL4001	VLF0116		1	
FL8001	VLF0199		1	
FL8002	VLF0198		1	
FL8003	EFCS5R06MS4V		1	
FL8004	VLF0143		1	NV-777EG

Ref. No.		Part No.	Part Name & Description	Pcs / Set	Remarks
			Delay lines		
DL3001		EFDVN645A23B		1	
EL8001		EFDWT124A13A		1	
			Relay		
RY1		VSY2029		1	
			Transfomers		
T4001		VLT0166		1	
T4002		VLT0167		1	
			Crystal		
X3001		VSX0099		1	
			Switches		
S3001		VSS0052		1	
S3002		VSS0001		1	
			Connectors		
P002		VJP1145	8P		
P3002		VJP1232	5P		
P3004		VJP1143	5P		
P3005		VJS0316	8P		
P3006		VJS1314	10P		
P3007		VJP1142	3P		
P3009		VJP1232	5P		
P4001		VJP1229	2P		
P4002		VJP1232	5P		
			Miscellaneous		
		VGT0311	Tracking VR Knob (Slow)	1	
		VGT0306	Tracking VR Knob	2	
		VJH0242	Front Jack Panel	1	
		VJH0245	Rear Jack Panel	1	
		VSC0849	Shield Case (Video ,Main)	1	
		VSC0851	Shield Case (Video,Bottom)	1	
		VSC0847	Shield Case (Top)	2	
		VSC0864	Shield Case (Audio, Main)	1	

Ref. No.		Part No.	Part Name & Description	Pcs / Set	Remarks
		VEP06176A	Operation P.C. Board Unit		
			Diodes		
D6501-6509		LN81RCPH	LED	9	
D6510		LN31GCPUHL	LED	1	
D6511-6521		MA165		11	
			Resistors		
R6501-6508		ERDS2TJ561	560	8	
R6509		ERDS2TJ331	330	1	
R6510		ERDS2TJ104	100K	1	
R6511		EVATOPC20B15	Variable 100K	1	
R6516,6517		ERD2TJ103	10K	2	
R6518		ERD2TJ472	4.7K	1	
			Switches		
S6501-6512		EVQQSB05G		12	
S6513		ESD14184		1	
			Connectors		
P6501		VJP1237	10P	1	
P6502		VJP1235	8P	1	
P6503		VJP1232	5P	1	
P6504		VJP1229	2P	1	
P6505		VJP1230	3P	1	
			E. Counter & Tape Remain		
			Integrated Circuit		
IC6601		μPD7503G034		1	
			Capacitor		
C6601		ECEA1HK010	Electrolytic 50V 1	1	
			Combination Circuit		
CR6601		EXBF7L280JN		1	
			Switches		
S6601,6602		EVQQSB05G		2	
			Miscellaneous		
		VGQ0427	LCD Holder	1	
		VMG0294	LCD Spacer	1	

Ref. No.		Part No.	Part Name & Description	Pcs / Set	Remarks
		VEP06178A	Infrared Remote Control		
			Receiver P.C. Board Unit		
			Integrated Circuit		
IC6550		μPC1373H		1	
			Diode		
D6550		PN313		1	
			Resistors		
R6550		ERDS2TJ154	150K	1	
R6551		ERDS2TJ120	12	1	
R6552		ERDS2TJ102	1K	1	
			Capacitors		
C6550		ECQV05183JZ	Mylar 50V 0.018	1	
C6551		APS472J100	Mylar 100V 4700	1	
C6552		ECEA1CS100	Electrolytic 16V 10	1	
C6553		ECEA1HSR47	Electrolytic 50V 0.47	1	
C6554		ECEA1CK470	Electrolytic 16V 47	1	
C6555		ECEA1CS100	Electrolytic 16V 10	1	
T6550		ELM7Q206A	Transformer	1	
T6550		ELM7Q206A		1	

Ref. No.		Part No.	Part Name & Description	Pcs / Set	Remarks
		VEP06179A	Power Supply & System		
			Control P.C. Board Unit		
			Integrated Circuits		
IC6001		MN1522VNA		1	
IC6002		BAL872		1	
IC6003		μPC358C		1	
IC6004,6005		BA6209		2	
IC6006		AN6914		1	
IC6007		STA431AX		1	
			Transistors		
Q6001		2SD636		1	(Q,R,S,T)
Q6004		2SD636		1	(Q,R,S,T)
Q6005		2SD1275		1	
Q6006-6012		2SD636		7	(Q,R,S,T)
Q6013		2SB641		1	(Q,R,S,T)
Q6014		2SD973		1	(Q,R,S)
Q6015-6017		2SD636		3	(Q,R,S,T)
Q6019		2SB941		1	(P,Q)
Q6020		2SB819		1	(P,Q,R)
Q6021		2SD636		1	(Q,R,S,T)
Q6022		2SB819		1	(P,Q,R)
Q6023,6024		2SD636		2	(Q,R,S,T)
Q6025		2SB641		1	(Q,R,S,T)
Q6026		2SD636		1	(Q,R,S,T)
Q6027,6028		2SB641		2	(Q,R,S,T)
Q6029		2SD636		1	(Q,R,S,T)
Q6030		2SB819		1	(P,Q,R)
Q6031-6033		2SA719		3	(Q,R,S)
Q6034-6036		2SB643		3	(Q,R)
Q6037,6038		2SD636		2	(Q,R,S,T)
Q6039		2SB643		1	(Q,R)
Q6040-6043		2SB641		4	(Q,R,S,T)
Q6044-6048		2SD636		5	(Q,R,S,T)
Q6051		2SB641		1	(Q,R,S,T)
			Diodes		
D1001-1008		10E1		8	⚠
D1009		10E1		1	
D1010-1012		MA165		3	
D6001-6018		MA165		18	
D6020,6021		MA165		2	
D6022		10E1		1	
D6023		EQA02-11C		1	
D6024		EQA02-13B		1	
D6025-6035		MA165		11	
D6036,6037		10E1		2	
D6038		MA165		1	
D6039		10E1		1	
D6040-6048		MA165		9	
D6049,6050		RD5.6JB	Zener	2	
D6052		RD13EB	Zener	1	
D6054-6058		MA165		5	
D6060		MA165		1	
D6062-6068		MA165		7	
D6070-6082		MA165		13	

Ref. No.		Part No.	Part Name & Description	Pcs / Set	Remarks
			Resistors		
R1001		ERDS2TJ222	2.2K	1	
R1002		ERDS2TJ562	5.6K	1	
R6001		ERDS2TJ154	150K	1	
R6002		ERDS2TJ104	100K	1	
R6004		ERDS2TJ103	10K	1	
R6005-6008		ERDS2TJ223	22K	4	
R6009		ERDS2TJ103	10K	1	
R6017		ERDS2TJ103	10K	1	
R6018		ERDS2TJ223	22K	1	
R6019,6020		ERDS2TJ103	10K	2	
R6021,6022		ERDS2TJ473	47K	2	
R6024-6026		ERDS2TJ103	10K	3	
R6027		ERDS2TJ473	47K	1	
R6028		ERDS2TJ562	5.6K	1	
R6029		ERDS2TJ473	47K	1	
R6030		ERDS2TJ123	12K	1	
R6031		ERDS2TJ103	10K	1	
R6032,6033		ERDS2TJ223	22K	2	
R6034		ERG12ANJ102	Metal Oxide 1/2W 1K	1	
R6035		ERDS2TJ223	22K	1	
R6037		ERDS2TJ103	10K	1	
R6038		ERDS2TJ152	1.5K	1	
R6039		ERDS2TJ102	1K	1	
R6040		ERDS2TJ682	6.8K	1	
R6041		ERDS2TJ103	10K	1	
R6042		ERDS2TJ124	120K	1	
R6043-6045		ERDS2TJ103	10K	3	
R6046,6047		ERDS2TJ473	47K	2	
R6048		ERDS2TJ223	22K	1	
R6049		ERDS2TJ102	1K	1	
R6050		ERDS2TJ183	18K	1	
R6051		ERDS2TJ101	100	1	
R6052		ERDS2TJ474	470K	1	
R6053		ERDS2TJ122	1.2K	1	
R6054		ERDS2TJ153	15K	1	
R6055,6056		ERDS2TJ103	10K	2	
R6057		ERDS2TJ332	3.3K	1	
R6058,6059		ERDS2TJ103	10K	2	
R6060		ERDS2TJ473	47K	1	
R6061,6062		ERDS2TJ223	22K	2	
R6063,6064		ERG1ANJ560	Metal Oxide 1W 56	2	
R6065		ERDS2TJ102	1K	1	
R6066		ERDS2TJ103	10K	1	
R6067		ERG12ANJ221	Metal Oxide 1/2W 220	1	
R6068		ERDS2TJ102	1K	1	
R6069		ERX1ANJ1R0	Metal 1W 1	1	
R6070		ERDS2TJ102	1K	1	
R6071		ERDS2TJ103	10K	1	
R6072		ERG12ANJ221	Metal Oxide 1/2W 220	1	
R6073		ERDS2TJ102	1K	1	
R6074-6076		ERDS2TJ473	47K	3	
R6077		ERDS2TJ103	10K	1	
R6080		ERG12ANJ471	Metal Oxide 1/2W 470	1	
R6081		ERDS2TJ103	10K	1	
R6083		ERDS2TJ103	10K	1	
R6084		ERG12ANJ471	Metal Oxide 1/2W 470	1	
R6085		ERX1ANJ3R3	Metal 1W 3.3	1	
R6086		ERX1ANJR82	Metal 1W 0.82	1	
R6087		ERDS2TJ154	150K	1	
R6088		ERDS2TJ153	15K	1	
R6089		ERDS2TJ473	47K	1	
R6090		EVN50AA00B53	Variable 5K	1	
R6091-6093		ERDS2TJ563	56K	3	

Ref. No.		Part No.	Part Name & Description	Pcs / Set	Remarks
R6094,6095		ERDS2TJ103	10K	2	
R6096		ERG1ANJ101	Metal Oxide 1W 100	1	
R6097		ERDS2TJ103	10K	1	
R6098		ERDS2TJ102	1K	1	
R6099		ERDS2TJ103	10K	1	
R6100		ERDS2TJ562	5.6K	1	
R6101		ERDS2TJ333	33K	1	
R6102		ERDS2TJ102	1K	1	
R6103		ERDS2TJ104	100K	1	
R6104		ERDS2TJ102	1K	1	
R6105,6106		ERDS2TJ103	10K	2	
R6107		ERDS2TJ153	15K	1	
R6108		ERDS2TJ104	100K	1	
R6109		ERDS2TJ562	5.6K	1	
R6110		ERDS2TJ102	1K	1	
R6111		ERDS2TJ104	100K	1	
R6112		ERDS2TJ333	33K	1	
R6113		ERDS2TJ102	1K	1	
R6114		ERDS2TJ562	5.6K	1	
R6115		ERDS2TJ333	33K	1	
R6116-6120		ERDS2TJ473	47K	5	
R6121		ERDS2TJ103	10K	1	
R6122		ERDS2TJ273	27K	1	
R6123		ERDS2TJ152	1.5K	1	
R6124		ERDS2TJ473	47K	1	
R6125		ERDS2TJ103	10K	1	
R6126		ERDS2TJ473	47K	1	
R6127,6128		ERDS2TJ223	22K	2	
R6129,6130		ERDS2TJ473	47K	2	
R6131		ERDS2TJ272	2.7K	1	
R6132-6134		ERDS2TJ822	8.2K	3	
R6135		ERD25TJ121	120	1	
R6136		ERDS2TJ682	6.8K	1	
R6137		ERDS2TJ272	2.7K	1	
R6138		ERDS2TJ822	8.2K	1	
R6139		ERDS2TJ682	6.8K	1	
R6140		ERDS2TJ223	22K	1	
R6141		ERDS2TJ822	8.2K	1	
R6142		ERDS2TJ682	6.8K	1	
R6143		ERD25TJ103	10K	1	
R6146		ERQ12AJ2R2	Metal 1/2W 2.2	1	⚠
R6147		ERDS2TJ393	39K	1	
R6149,6150		ERDS2TJ103	10K	2	
R6151		ERG12ANJ561	Metal Oxide 1/2W 560	1	
R6152,6153		ERDS2TJ473	47K	2	
R6154		ERDS2TJ103	10K	1	
R6155		ERDS2TJ273	27K	1	
R6156		ERDS2TJ103	10K	1	
R6157		ERDS2TJ223	22K	1	
R6158		ERDS2TJ183	18K	1	
R6159		ERDS2TJ392	3.9K	1	
R6164		ERDS2TJ104	100K	1	
R6167		ERDS2TJ272	2.7K	1	
R6169,6170		ERDS2TJ473	47K	2	
R6171-6173		ERDS2TJ103	10K	3	
R6174		ERDS2TJ332	3.3K	1	
R6175,6176		ERDS2TJ103	10K	2	
R6177		ERDS2TJ473	47K	1	
R6178		ERDS2TJ680	68	1	

Ref. No.	Part No.	Part Name & Description			Pcs / Set	Remarks
		Capacitors				
C1001,1002	ECEA1VSS102	Electrolytic	35V	1000	2	
C1003,1004	ECKF1H103ZF	Ceramic	50V	0.01	2	
C1005	ECEA50Z3R3	Electrolytic	50V	3.3	1	
C1006,1007	ECEA1ESS102	Electrolytic	25V	1000	2	
C1008	ECES1EV332	Electrolytic	25V	3300	1	
C1009	ECEA1HS2R2	Electrolytic	50V	2.2	1	
C1010	ECEA1CS221	Electrolytic	16V	220	1	
C1011	ECEA50ZR22	Electrolytic	50V	0.22	1	
C6001	ECKF1H562KB	Ceramic	50V	5600P	1	
C6002	ECEA0JS221	Electrolytic	6.3V	220	1	
C6003	ECEA25Z4R7	Electrolytic	25V	4.7	1	
C6004	ECQV05104JB	Mylar	50V	0.1	1	
C6005-6008	ECKF1H103ZF	Ceramic	50V	0.01	4	
C6009	ECEA0JS101	Electrolytic	6.3V	100	1	
C6010	ECKF1H103ZF	Ceramic	50V	0.01	1	
C6011	ECKF1H221KB	Ceramic	50V	220P	1	
C6012	ECEA50Z1	Electrolytic	50V	1	1	
C6013	ECEA1ES4R7	Electrolytic	25V	4.7	1	
C6014	ECEA50Z1	Electrolytic	50V	1	1	
C6015	ECKF1H103ZF	Ceramic	50V	0.01	1	
C6016	ECKF1H221KB	Ceramic	50V	220P	1	
C6017,6018	ECEA1CS100	Electrolytic	16V	10	2	
C6019,6020	ECKF1H103ZF	Ceramic	50V	0.01	2	
C6021	EECW10D433	Gold Capacitor	10V	0.043	1	
C6022	ECQV05104JB	Mylar	50V	0.1	1	
C6023	ECEA1HS010	Electrolytic	50V	1	1	
C6024	ECQV05104JB	Mylar	50V	0.1	1	
C6025	ECEA0JS470	Electrolytic	6.3V	47	1	
C6026	ECEA1HN010S	Electrolytic	50V	1	1	
C6027	ECQM1H103KZ	Mylar	50V	0.01	1	
C6028	ECEA1HS010	Electrolytic	50V	1	1	
		Resistor Arrays				
RX6001-6005	EXBP84103K			10K	5	
RX6006	EXBP84473K			47K	1	
RX6007	EXBP86103K			10K	1	
RX6008	EXBP84273K			27K	1	
RX6009	EXBP84682K			6.8K	1	
		Connectors				
P1001	VJP1235			8P	1	
P1003	VJP1232			5P	1	
P1004	VJP1230			3P	1	
P1005	VJS1316			8P	1	
P6001,6002	VJS1214			10P	2	
P6003	VJS1316			8P	1	
P6007	VJP1239			12P	1	
P6009	VJP1232			5P	1	
P6010	VJP1239			10P	1	
P6013	VJP1230			3P	1	
P6014,6015	VJP1229			2P	2	

Ref. No.	Part No.	Part Name & Description	Pcs / Set	Remarks
	VEP07147A/B	Timer Decoder P.C. Board Unit		
		Integrated Circuits		
IC7501	MN1512VTD		1	
IC7502	MN1228		1	
IC7503	MN1455BVC		1	
IC7504	AN6873N		1	
IC7505	AN5033		1	
IC7506	μPD4049UBC		1	
		Transistors		
Q7504	2SD636		1	or EQA02-07AB, MA1068-UM
Q7505,7506	2SB641		2	
Q7508,7509	2SD636		2	
Q7511	2SD637		1	
Q7512	2SB642		1	
Q7515	2SB644		1	
Q7517,7518	2SB644		2	
Q7519	2SB641		1	
		Diodes		
D7501	RD6.8EB	Zener	1	
D7502,7503	MA165		2	
D7504	LN28WP	LED	1	
D7506,7507	MA165		2	
D7509	MA165		1	
D7510	MA165		1	NV-777E,EG
D7511,7512	MA165		2	
D7515	MA165		1	
D7516	MA165		1	
D7519	10E2		1	
D7520	MA165		1	
D7522	RD30EB2	Zener	1	
D7523	LN28WP	LED	1	
D7524,7525	10E2		2	
D7526	RD12EB	Zener	1	
D7527	MA27W-B		1	
D7529	LN38GCPP	LED	1	
D7530	10E2		1	
D7535	MA165		1	
D7541,7542	MA165		2	
D7544-7549	MA165		6	
D7551	MA165		1	
D7553,7554	MA165		2	
		Resistors		
R7503	ERD10TJ471	1/8W 470	1	
R7505	ERDS2TJ102	1K	1	
R7508	ERD25TJ334	330K	1	NV-777E,EG
R7514	ERDS2TJ122	1.2K	1	
R7515	ERC14GJ126	Solid 12M	1	
R7516	ERDS2TJ102	1K	1	
R7517,7518	ERDS2TJ223	22K	2	
R7519	ERDS2TJ271	270	1	
R7520	ERDS2TJ183	18K	1	
R7521	ERDS2TJ473	47K	1	

Ref. No.		Part No.	Part Name & Description	Pcs / Set	Remarks
R7522		ERDS2TJ182	1.8K	1	
R7523		ERDS2TJ224	220K	1	
R7524		ERDS2TJ154	150K	1	
R7525		ERDS2TJ334	330K	1	
R7526		ERDS2TJ104	100K	1	
R7527		EVNK6AA00B25	Variable 200K	1	
R7531		ERDS2TJ222	2.2K	1	
R7532		ERDS2TJ223	22K	1	
R7533		ERDS2TJ332	3.3K	1	
R7534		ERDS2TJ391	390	1	
R7535		ERDS2TJ473	47K	1	
R7536		ERDS2TJ104	100K	1	
R7538,7539		ERDS2TJ473	47K	2	
R7540		ERDS2TJ104	100K	1	
R7541		ERDS2TJ124	120K	1	
R7542		ERDS2TJ103	10K	1	
R7543		ERD10TJ122	1/8W 1.2K	1	
R7544		EWEU2A016B24	Variable 20K	1	
R7545		ERDS2TJ271	270	1	
R7546		ERDS2TJ124	120K	1	
R7547		ERDS2TJ221	220	1	
R7548		ERDS2TJ102	1K	1	
R7550		ERDS2TJ104	100K	1	
R7552		ERDS2TJ104	100K	1	
R7553		ERDS2TJ273	27K	1	
R7554		ERDS2TJ562	5.6K	1	
R7555		ERDS2TJ223	22K	1	
R7557		ERD50TJ472	1/2W 4.7K	1	
R7558		ERDS2TJ561	560	1	
R7559		ERQ14AJ181	Fuse 180	1	⚠
R7560		ERD2FCJ4R7	Fuse 2W 4.7	1	⚠
R7561		ERG1ANJ392	3.9K	1	
R7562		ERDS2TJ473	47K	1	
R7563		ERDS2TJ820	82	1	
R7564		ERDS2TJ390	39	1	
R7565		ERD25TJ153	15K	1	
R7567		ERDS2TJ334	330K	1	
R7568		ERDS2TJ473	47K	1	
R7569		ERDS2TJ332	3.3K	1	
R7571		ERDS2TJ473	47K	1	
R7572		ERDS2TJ102	1K	1	
R7573,7574		ERDS2TJ471	470	2	
R7583		EVNK6AA00B14	Variable 10K	1	
R7584		ERDS2TJ104	100K	1	NV-777E,EG
R7585		ERDS2TJ332	3.3K	1	
R7586		ERDS2TJ471	470	1	
R7588		ERDS2TJ472	4.7K	1	
R7589		ERDS2TJ124	120K	1	
R7590		ERDS2TJ471	470	1	
			Capacitors		
C7502		ECCF1H080DC	Ceramic 50V 8P	1	
C7503		ECV1ZW20X32E	Trimmer 500V 20P	1	
C7504		ECCF1H330JC	Ceramic 50V 33	1	
C7505		ECCF1H220JC	Ceramic 50V 22	1	
C7506		ECKF1H103ZF	Ceramic 50V 0.01	1	
C7507		ECEA1AS101	Electrolytic 10V 100	1	
C7508		ECEA1HS010	Electrolytic 50V 1	1	
C7512		ECEA1ES4R7	Electrolytic 25V 4.7	1	
C7513		ECEA1HSR47	Electrolytic 50V 0.47	1	

Ref. No.		Part No.	Part Name & Description	Pcs / Set	Remarks
C7514,7515		ECCF1H101J5	Ceramic 50V 100P	2	
C7516		ECCF1H330J	Ceramic 50V 33P	1	
C7517		ECEA1CS100	Electrolytic 16V 10	1	
C7518		ECKF1H103ZF	Ceramic 50V 0.01	1	
C7519		ECQV05104JB	Mylar 50V 0.1	1	
C7520		ECQV05683JZ	Mylar 50V 0.068	1	
C7521		ECQV05823JZ	Mylar 50V 0.082	1	
C7522		ECQV05273JZ	Mylar 50V 0.027	1	
C7523-7525		ECKF1H103ZF	Ceramic 50V 0.01	3	
C7526		ECEA1CS100	Electrolytic 16V 10	1	
C7527		ECQM1H392JZ	Mylar 50V 3900P	1	
C7528		ECQV05473JZ	Mylar 50V 0.047	1	
C7529		ECEA1JS100	Electrolytic 63V 10	1	
C7530		ECEA1HS100	Electrolytic 50V 10	1	
C7531		ECEA2AS101	Electrolytic 100V 100	1	
C7532		ECEA1HS100	Electrolytic 50V 10	1	
C7533		ECEA2AS101	Electrolytic 100V 100	1	
C7534		ECEA1HS010	Electrolytic 50V 1	1	
C7535		ECKF1H103ZF	Ceramic 50V 0.01	1	
C7541		ECEA1CS100	Electrolytic 16V 10	1	
C7542		ECEA1CS470	Electrolytic 16V 47	1	
C7544		ECKF1H103ZF	Ceramic 50V 0.01	1	
			Crystals		
X7501		VSX0071-A		1	
X7502		VSX0094-A		1	
X7503		VSX0082		1	
			Switches		
SW7504		VES0213		1	
SW7505		ESD14137A		1	NV-777E,EG
SW7512		EVQQS405K		1	
SW7518,7519		EVQQS405K		2	
			Connectors		
P7501		VJP1239	12P	1	
P7502		VJP1230	3P	1	
P7503		VJP1235	6P	1	
P7504		VJP1141	2P	1	
P7505,7506		VJP1230	3P	1	
P7506		VJP1232	5P	1	
P7507		VJP1142	2P	1	
P7508		VJP1229	2P	1	

Ref. No.		Part No.	Part Name & Description	Pcs / Set	Remarks
			Timer Operation P.C. Board		
			Unit		
			Transistors		
Q7501-7503		2SB642		3	
			Diodes		
D7501		RD6.8EB	Zener	1	
D7506,7507		MA165		2	
D7513-D7515		MA165		3	
D7517		MA165		1	
D7518		RD10EB	Zener	1	
D7531		LN31GCPUHL	LED	1	
D7556		MA165		1	
			Resistors		
R7501,7502		ERDS2TJ100	10	2	
R7504		ERDT2TJ273	27K	1	
R7506,7507		ERDT2TJ273	27K	2	
R7511-7513		ERDS2TJ473	47K	3	
R7566		ERDS2TJ471	470	1	
R7587		ERDT2TJ273	27K	1	
			Resistor Array		
RX7501		EXBEQ4273K	27K	1	
			Switches		
SW7501		EVQQ8R13K		1	
SW7502		EVQQJ104K		1	
SW7503		EVQQJ104J		1	
SW7506		VES0215		1	
SW7507-7511		EVQQJ104J		5	
SW7513,7514		EVQQJ104J		2	
SW7516,7517		EVQQJ104J		2	
SW7520		VES0213		1	
SW7521,7522		VSP0111		2	
			Miscellaneous		
DP7501		VSL0017	Display Tube	1	
DP7502		VSL0018	Display Tube	1	
		VGQ0225	Display Holder (Timer)	1	
		VGQ0417	Display Holder (Channel)	1	
		VMX0294	Display Spacer	1	

Ref. No.		Part No.	Part Name & Description	Pcs / Set	Remarks
		VEP07149A/B	TV Demodulator P.C. Board		
			Unit		
			Integrated Circuits		
IC701		BN5115		1	
IC751		AN5215		1	
			Transistors		
Q701		2SD636		1	(Q,R,S,T)
Q702		2SB641		1	(Q,R,S,T)
Q703		2SD636		1	(S,T)
Q704		2SK55P		1	(D)
Q705,706		2SD636		2	(Q,R,S,T) NV-777E,EG
Q707		2SD636		1	(Q,R,S,T) NV-777B
Q709		2SB642		1	(Q,R,S,T) NV-777B
Q7006		2SD636		1	(Q,R,S,T)
Q7007		2SD1266		1	(P,Q)
Q7008		2SD637		1	(Q,R,S,T)
Q7009		2SC1826LF3		1	(R)
Q7010		2SD636		1	(Q,R,S,T)
			Diodes		
D701,702		MA165		2	
D704,705		MA165		2	NV-777B
D7007		MA165		1	
D7008		10E1FA8		1	
D7009		RD15JB1	Zener	1	
D7010		RD13EB1	Zener	1	
			Resistors		
R701		ERDS2TJ222	2.2K	1	NV-777B
R701		ERDS2TJ332	3.3K	1	NV-777E,EG
R702		EVN50AA00B23	Variable 2K	1	
R703		ERDS2TJ122	1.2K	1	
R703		ERDS2TJ682	6.8K	1	NV-777B
R704		ERDS2TJ122	1.2K	1	
R705		EVN50AA00B23	Variable 2K	1	NV-777E,EG
R706		ERDS2TJ222	2.2K	1	NV-777E,EG
R707		ERDS2TJ393	39K	1	
R708		ERDS2TJ473	47K	1	
R711		ERDS2TJ274	270K	1	
R712		ERDS2TJ183	18K	1	
R713		ERDS2TJ392	3.9K	1	
R714		ERDS2TJ102	1K	1	
R715		ERDS2TJ391	390	1	
R716		ERDS2TJ561	560	1	
R717		ERDS2TJ102	1K	1	
R719		ERDS2TJ561	560	1	
R722		ERDS2TJ183	18K	1	
R723		ERDS2TJ562	5.6K	1	
R724		ER0S2TKG8200	Metal 820	1	
R725		ERDS2TJ470	47	1	
R726		ERDS2TJ680	68	1	
R727		ER0S2TKG1001	Metal 1K	1	
R728		EVN50AA00B14	Variable 10K	1	
R731		ERDS2TJ680	68	1	
R732		ERDS2TJ102	1K	1	

Ref. No.		Part No.	Part Name & Description	Pcs / Set	Remarks
R733		ERDS2TJ270	27	1	
R734		ERDS2TJ332	3.3K	1	
R735		ERD2FCG220P	22	1	⚠
R737		ERDS2TJ561	560	1	
R739		ERDS2TJ222	2.2K	1	NV-777B
R739		ERDS2TJ152	1.5K	1	NV-777E,EG
R740		ERDS2TJ103	10K	1	
R741,742		ERDS2TJ563	56K	2	NV-777E,EG
R743		ERDS2TJ473	47K	1	NV-777B
R744		ERDS2TJ223	22K	1	NV-777B
R749		ERDS2TJ562	5.6K	1	NV-777B
R752		ERD2FCG220	22	1	⚠
R754		ERDS2TJ152	1.5K	1	
R755		EVNK6AA00B24	Variable 20K	1	
R756		ERDS2TJ102	1K	1	
R757		ERDS2TJ338	33K	1	NV-777E,EG
R758		ERDS2TJ562	5.6K	1	NV-777E,EG
R759		ERDS2TJ333	33K	1	NV-777E,EG
R760		ERDS2TJ562	5.6K	1	NV-777E,EG
R761		ERDS2TJ332	3.3K	1	NV-777B
R790		ERDS2TJ750	75	1	
R7014		ERDS2TJ102	1K	1	
R7015		ERDS2TJ103	10K	1	
R7016		ERQ12HJ3R9	Metal 1/2W 3.9	1	⚠
R7017		ERDS2TJ332	3.3K	1	
R7018		ERDS2TJ271	270	1	
R7019,7020		ERDS2TJ223	22K	2	
R7021		ERD2FCJ4R7	4.7	1	⚠
R7022		ERDS2TJ102	1K	1	
			Capacitors		
C701		ECEA1CS220	Electrolytic 16V 22	1	
C702		ECEA1CS100	Electrolytic 16V 10	1	
C703		ECKF1H103ZF	Ceramic 50V 0.01	1	NV-777E,EG
C704		ECEA1CS330	Electrolytic 16V 33	1	NV-777E,EG
C705		ECEA50ZR68	Electrolytic 50V 0.68	1	
C706		ECEA1CS330	Electrolytic 16V 33	1	
C707,708		ECKF1H103ZF	Ceramic 50V 0.01	2	
C709		ECQV05224JZ	Mylar 50V 0.22	1	
C710		ECKF1H103ZF	Ceramic 50V 0.01	1	
C711,712		ECCF1H030CC	Ceramic 50V 3P	2	
C713		ECCF1H121JP	Ceramic 50V 120P	1	
C714		ECCF1H220JC	Ceramic 50V 22P	1	
C715,716		ECKF1H103ZF	Ceramic 50V 0.01	2	
C717		ECCF1H150JC	Ceramic 50V 15P	1	
C718		ECCF1H560JR	Ceramic 50V 56P	1	
C719		ECEA50Z1	Electrolytic 50V 1	1	
C720		ECKF1H103ZF	Ceramic 50V 0.01	1	
C721		ECEA1CS470	Electrolytic 16V 47	1	
C723		ECEA1EN4R7S	Electrolytic 25V 4.7	1	
C724		ECCF1H150JC	Ceramic 50V 15P	1	
C726		ECCF1H680JC	Ceramic 50V 68P	1	
C727		ECCF1H100DC	Ceramic 50V 10P	1	NV-777E,EG
C727		ECCF1H080DC	Ceramic 50V 8P	1	NV-777B
C728		ECCF1H100DC	Ceramic 50V 10P	1	
C731		ECQM1H103KZ	Mylar 50V 0.01	1	
C732		ECKF1H103ZF	Ceramic 50V 0.01	1	
C733		ECCF1H151JC	Ceramic 50V 150P	1	
C734,735		ECKF1H103ZF	Ceramic 50V 0.01	2	
C736		ECEA1HS010	Electrolytic 50V 1	1	
C737		ECEA1CS220	Electrolytic 16V 22	1	
C739		ECKF1H103ZF	Ceramic 50V 0.01	1	

Ref. No.		Part No.	Part Name & Description	Pcs / Set	Remarks
C740		ECQV05104JB	Mylar 50V 0.1	1	
C743		ECQM1H103KZ	Mylar 50V 0.01	1	
C745		ECKF1H103ZF	Ceramic 50V 0.01	1	NV-777B
C746		ECEA1CS220	Electrolytic 16V 22	1	
C747		ECKF1H103ZF	Ceramic 50V 0.01	1	NV-777B
C751		ECCF1H050CC	Ceramic 50V 5P	1	
C753		ECQM1H473KV	Mylar 50V 0.047	1	
C754		ECEA1CS101	Electrolytic 16V 100	1	
C755		ECCF1H390JP	Ceramic 50V 39P	1	
C756		ECCF1H120JC	Ceramic 50V 12P	1	
C757		ECKF1H561KB	Ceramic 50V 560P	1	
C758		ECCF1H820JP	Ceramic 50V 82P	1	
C759		ECEA1CS100	Electrolytic 16V 10	1	
C760		ECEA1HN010S	Electrolytic 50V 1	1	
C761		ECQM1H393KS	Mylar 50V 0.039	1	
C7006,7007		ECEA1ES101	Electrolytic 25V 100	2	
C7008		ECEA1CS220	Electrolytic 16V 22	1	
C7009		ECEA1CS330	Electrolytic 16V 33	1	
			Coils		
L701		VLQEL06F220K	22μH	1	
L703		VLQEL06F150K	15μH	1	
L704		VLQEL06F470K	47μH	1	
L705		VLQEL06F560K	56μH	1	
L706		VLQEL06F820K	82μH	1	
L707		ELQSF68KB	0.68μH	1	
L7001		VLQEL06F221K	220μH	1	NV-777B
			Combination Circuits		
RX701		EXPR220K272S	22P 2.7K	1	
RX702		EXRP102K471S	1000P 470	1	
			Transformers		
T700		EIV7E019A		1	NV-777B
T700		EIV7E016H		1	NV-777E,EG
T701		EULHLB352		1	NV-777B
T701		EULHLB307		1	NV-777E,EG
T702		EIM7A511		1	
T703		EIV7EQ16F		1	
T704		EIV7E016E		1	
T751		EIS7E006A		1	
T752		EIS7E006B		1	
			Crystals		
X702		EFCS6R0MS4		1	NV-777B
X702		EFCS5R5MS4		1	NV-777E,EG
X703		EFCS6R0MW3		1	NV-777B
X703		EFCS5R5MW3		1	NV-777E,EG
			Connectors		
P701		VJP1233	6P	1	
P702,703		VJP1230	3P	2	
P704		VJP1239	12P	1	
P705		VJP1141	2P	1	

Ref. No.		Part No.	Part Name & Description	Pcs / Set	Remarks
			RF Converter Unit		
		ENC17551			NV-777E,EG
		ENC17552			NV-777B
		ENC17551	RF Converter Unit		NV-777E,EG
			Integrated Circuit		
IC1		AN6395		1	
UO-1			UHF Oscillator	1	
			Transistors		
Q1,2		2SD636		2	
Q3,4		2SC1215		2	(R)
			Diodes		
D1		1S953		1	
D2,3		1SS86		2	
D4		MA1075	Zener	1	
		or RD7.5E			
			Resistors		
R1		ERD10TJ333	33K	1	
R2		ERJ8GCJ103	Chip 10K	1	
R3		ERJ8GCJ331	Chip 330	1	
R4		ERJ8GCJ474	Chip 470K	1	
R5		ERJ8GCJ392	Chip 3.9K	1	
R6		ERD10TJ182	1.8K	1	
R7		ERJ8GCJ122	Chip 1.2K	1	
R8		ERJ8GCJ821	Chip 820	1	
R9		ERJ8GCJ562	Chip 5.6K	1	
R10		ERJ8GCJ151	Chip 150	1	
R11		ERD10TJ472	4.7K	1	
R12,13		ERJ8GCJ101	Chip 100	2	
R15		ERF8GCJ270	Chip 27	1	
R16		ERD25TJ751	1/4W 750	1	
R17		ERJ8GCJ121	Chip 120	1	
R18		ERD10TJ393	39K	1	
R19		ERD25FJ560	1/4W 560	1	
R20,21		ERD10TJ822	8.2K	2	(UO-1)
R22		ERD10TJ391	390	1	(UO-1)
VR1		EVX138CA00B13	Variable 1K	1	
VR2		EVX138CA00B14	Variable 10K	1	
			Capacitors		
C1		ECEA1AK330	Electrolytic 10V 33	1	
C2		ECEA1HK3R3	Electrolytic 50V 3.3	1	
C3		CP2101J	Chip 100P	1	
C4		CP2040CC	Chip 4P	1	
C5		CP2222MD	Chip 2200P	1	
C6		CP2150CC	Chip 15P	1	
C7		ECCD1H820K	Ceramic 82P	1	
C8		CP2050CC	Chip 5P	1	

Ref. No.		Part No.	Part Name & Description	Pcs / Set	Remarks
C9		CT1152ZX	Semiconductor 1500P	1	
C10		ECEA1EK4R7	Electrolytic 25V 4.7	1	
C11		CP2103MD	Chip 0.01	1	
C12		CP2150J	Chip 15P	1	
C13		CP2680J	Chip 68P	1	
C14		CP2151J	Chip 150P	1	
C15		CP2470J	Chip 47P	1	
C16		CP2270J	Chip 27P	1	
C17		ECV1ZW25X53N	Trimmer 25P	1	
C18,19		CP2221J	Chip 220P	2	
C20		CY2102PE	1000P	1	(UO-1)
C21		CX2331KB	330P	1	(UO-1)
C22		CX2140K	14P	1	(UO-1)
C23		CX2040C	4P	1	(UO-1)
C24			Variable 7P	1	(UO-1)(Not Available)
C25		CP2070J	Chip 7P	1	
C26		CP2103MD	Chip 0.01	1	
C27		ECEA1CK470	Electrolytic 16V 47	1	
C28		CP2103MD	Chip 0.01	1	
C29		CP2102MD	Chip 1000P	1	
C30		ECCD1H010CC	Ceramic 50V 1P	1	(UO-1)
C31		CP2102MD	Chip 1000P	1	
C32		ECCD1H040CC	Ceramic 50V 4P	1	
C33		CU2DR2QA-S	0.2P	1	(UO-1)
			Coils		
L1		LP403804		1	
L2		FL3H8R2K	Peaking 8.2μH	1	
L3		LB1626092A02	Choke	1	
L4		LN07W350VL01		1	(UO-1)
L5		LN08W200L6		1	(UO-1)
L6		LB162609VU03	Choke	1	(UO-1)
			Transformer		
T1		VLT0327	SIF Oscillator	1	
T2		BRNA010V		1	
			Miscellaneous		
P1		VJP1143	Connector 5P	1	
PJ		PNJA002E	Pin Jack	1	

Ref. No.	Part No.	Part Name & Description	Pcs / Set	Remarks
	ENC17552	RF Converter Unit		NV-777B
		Integrated Circuits		
IC1	AN6395		1	
UO-1		UHF Oscillator	1	
		Transistors		
Q1,2	2SD636		2	
Q3,4	2SC1215		2	(R)
		Diodes		
D1	1S953		1	
D2,3	1SS86		2	
D4	RD7.5E	Zener	1	or MA1075
		Resistors		
R1	ERD10TJ333	33K	1	
R2	ERJ8GCJ103	Chip 10K	1	
R3	ERJ8GCJ331	Chip 330	1	
R4	ERJ8GCJ474	Chip 470K	1	
R5	ERJ8GCJ392	Chip 3.9K	1	
R6	ERD10TJ182	1.8K	1	
R7	ERJ8GCJ122	Chip 1.2K	1	
R8	ERJ8GCJ821	Chip 820	1	
R9	ERJ8GCJ562	Chip 5.6K	1	
R10	ERJ8GCJ151	Chip 150	1	
R11	ERD10TJ562	5.6K	1	
R12,13	ERJ8GCJ101	Chip 100	2	
R15	ERJ8GCJ270	Chip 27	1	
R16	ERD10TJ751	750	1	
R17	ERJ8GCJ121	Chip 120	1	
R18	ERD10TJ393	39K	1	
R19	ERD25FJ560	1/4W 560	1	
R20,21	ERD10TJ822	8.2K	2	(UO-1)
R22	ERD10TJ391	390	1	(UO-1)
VR1	EVX138CA00B13	Variable 1K	1	
VR2	EVX138CA00B14	Variable 10K	1	
		Capacitors		
C1	ECEA1AK330	Electrolytic 10V 33	1	
C2	ECEA1HK3R3	Electrolytic 50V 3.3	1	
C3	ECCD1H101	Ceramic 50V 100P	1	
C4	CP2040CC	Chip 4P	1	
C5	CP2222MD	Chip 2200P	1	
C6	CP2150CC	Chip 15P	1	
C7	ECCD1H820K	Ceramic 50V 82P	1	
C8	CP2050CC	Chip 5P	1	
C9	CT1152ZX	Semiconductor 1500P	1	
C10	ECEA1EK4R7	Electrolytic 25V 4.7	1	
C11	CP2103MD	Chip 0.01	1	
C12	CP2150J	Chip 15P	1	
C13	CP2680J	Chip 68P	1	
C14	CP2151J	Chip 150P	1	
C15	CP2390J	Chip 39P	1	
C16	CP2270J	Chip 27P	1	
C17	ECV1ZW25X53N	Trimmer 25P	1	
C18,19	CP2181J	Chip 180P	2	
C20	CY2102PE	1000P	1	(UO-1)
C21	CX2331KB	330P	1	(UO-1)
C22	CX2140K	14P	1	(UO-1)
C23	CX2040C	4P	1	(UO-1)
C24		Variable 7P	1	(UO-1)
				(Not Available)
C25	CP2070J	Chip 7P	1	
C26	CP2103MD	Chip 0.01	1	
C27	ECEA1CK470	Electrolytic 16V 47	1	
C28	CP2103MD	Chip 0.01	1	
C29	CP2102MD	Chip 1000P	1	
C30	ECCD1H010CC	Ceramic 50V 1P	1	(UO-1)
C31	CP2102MD	Chip 1000P	1	
C32	ECCD1H040CC	Ceramic 50V 4P	1	
C33	CU2DR2QA-S	0.2P	1	(UO-1)
		Coils		
L1	LP403804		1	
L2	FL3H8R2K	Peaking 8.2μH	1	
L3	LB1626092A02	Choke	1	
L4	LN07W350VL01		1	(UO-1)
L5	LN08W200L6		1	(UO-1)
L6	LB162609VU03	Choke	1	(UO-1)
		Transformers		
T1	VLT0327	SIF Oscillator	1	
T2	BRNA010V		1	
		Miscellaneous		
P1	VJP1143	Connector 5P	1	
PJ	PNJA002E	Pin Jack	1	

Ref. No.		Part No.	Part Name & Description	Pcs / Set	Remarks
			Take-Up Photo Sensor		
			P.C. Board		
			Transistors		
Q1504		PN150NV		1	
			Capacitor		
		ECKF1H102KB	Ceramic 50V 1000P	1	
			Sensor LED P.C. Board		
			Diodes		
D1501,1502		LN58	LED	2	
		VMD0145	Holder	1	
			Supply Photo Sensor		
			P.C. Board		
			Transistor		
Q1508		PN150NV		1	
			Capacitor		
		ECKF1H102KB	Ceramic 50V 1000P	1	
			Power IC Heat Sink		
			P.C. Board		
			Integrated Circuits		
IC1501		STR1195		1	⚠
IC1502		AN7806V		1	⚠
			Reel Motor Heat Sink		
			P.C. Board		
			Transistors		
Q1502		2SD1265		1	
Q1503		2SD1273		1	
			Connector		
P1503		VJP 1230	3P	1	

Ref. No.		Part No.	Part Name & Description	Pcs / Set	Remarks
			Front Loading Motor		
			Connection P.C. Board		
			Switch	2	
P1505			Connector	1	
			Motor Connection		
			P.C. Board		
P1505		VJP1248	8P	1	
			Reel Sensor P.C. Board		
Q1505-1507		DN6838A	Hall IC	3	
		VEP2050	Remote Control Transmitter		NV-A17E
			Integrated Circuit		
IC1		MN6028R			
			Transistors		
Q1		2SD636		1	(Q,R) or 2SD637(Q,R)
Q2		2SD638		1	(R,S) or 2SD639(R,S)
Q3		2SD636		1	(Q,R) or 2SD637(Q,R)
			Diodes		
D1		LN230RA	LED	1	
D2,3		SE303A	IR LED	2	or LN66(R,S)
D4-7		M165		4	
			Resistors		
R1		ERD25TJ333	33K	1	
R2		ERD25TJ101	100	1	
R3		ERD25TJ1R0	1	1	
R4		ERD25TJ470	47	1	
R5		ERD25TJ332	3.3K	1	
R6		ERD25TJ223	22K	1	
			Capacitors		
C1		ECEA0JS101	Electrolytic 6.3V 100	1	
C2,3		ECKF1H101KB	Ceramic 50V 0.01	2	